PUMPSENSE

Fluid Engineering Pvt. Ltd

SW Non-clog Sewage Pumps-range

- High Energy Efficiency
- Optimum Mechanical Reliability
- Large Solid handling capacity
- Large Number of Pumps for optimum selection
- Horizontal, Vertical & Cardan Shaft option

Pumpsense SW Range of Sewage Pumps

Pumpsense SW range of pumps has been designed to handle unscreened raw sewage. The range incorporates our knowledge and experience of successful pumping of liquids containing solids and waste material throughout the world. The pumps handle flow rates up to 4000 m^3/hr and heads up to 100 m. For duties beyond this range, we can offer customized pumps to meet your specific pumping needs.

Design

The pumps are available either as horizontal or vertical dry well units. Vertical pumps are offered with direct motor mounted or cardan shaft options. Impellers are of open shrouded design with supplementary vanes at the back and front to minimize the chances of ragging and to eliminate the ingress of abrasive materials to the stuffing box area. They have been designed with the minimum number of vanes compatible with good hydraulic performance to ensure that the maximum sizes of solids can be handled.

To further reduce the possibility of ragging, eye velocities have been kept deliberately low. The stuffing box can be provided both with packed glands and mechanical seals. The stuffing box is configured to ensure maximum sleeve life, thus reducing the cost of maintenance. The solid volute casing is protected by renewable wear rings at the front and the back of the impeller. To facilitate cleaning, both the casing and suction branch are provided with easily removable hand hole covers. The vertical selection is available with the motor mounted directly on the pump or with it at a higher floor level in which case it is connected through intermediate cardan shafting to the pump. Depending upon the length involved, this shafting may have intermediate bearings of the plummer block style.

Range Description

Size	:	80 to 600 mm
Capacities	:	Up to 4000 m^3/hr.
Head	:	Up to 100m
Speed	:	Up to 1800 rpm

Three Vane Impeller

Applications

1. Sewage Treatment Plant
2. Pumping for Industrial Effluent / Sewage
3. Pumping for water containing sludge
4. Transfer pump for raw water
5. Transfer of Unscreened raw Sewage

Two Vane Impeller

Options

Materials - CI, DI, Bronze, SS, Ni Resist

Stuffing Box - Packed Gland, Mechanical Seal

Constructional Features

Centrifugal, Horizontal/vertical model, open shrouded design with supplementary vanes, minimum no of vanes for solid handling capacity.

Features

1. High Energy Efficiency
2. Optimum Mechanical Reliability
3. Large Solid Handling Capacity
4. Large Number of Pumps for optimum selection
5. Horizontal, Vertical and Cardan Shaft option

RANGE CHART OF DRY PIT SEWAGE PUMPS (SW SERIES)

SINGLE STAGE SEWAGE PUMPS WITH SINGLE ENTRY IMPELLERS (Speed 1500 RPM - 50 Hz, 4 Pole)

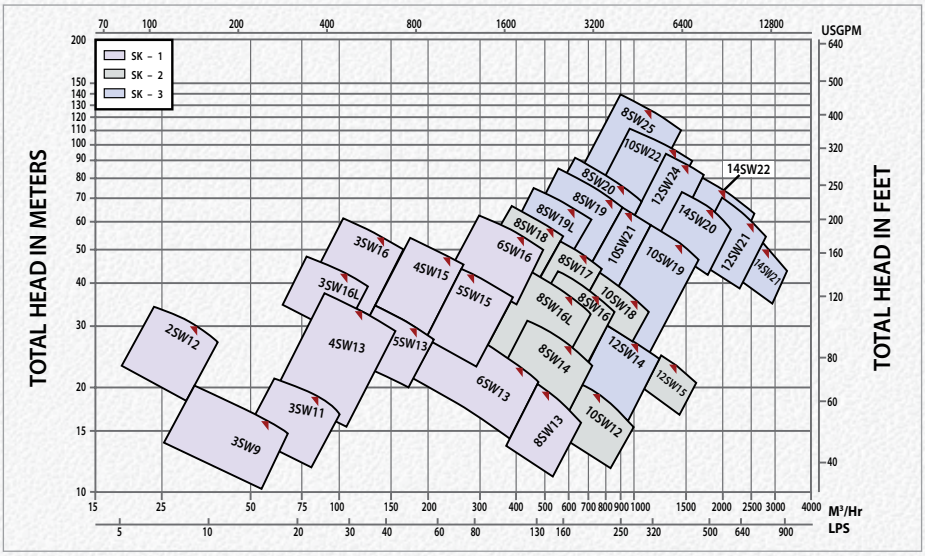

CAPACITY

RANGE CHART OF DRY PIT SEWAGE PUMPS (SW SERIES)

SINGLE STAGE SEWAGE PUMPS WITH SINGLE ENTRY IMPELLERS (Speed 1000 RPM - 50 Hz, 6 Pole)

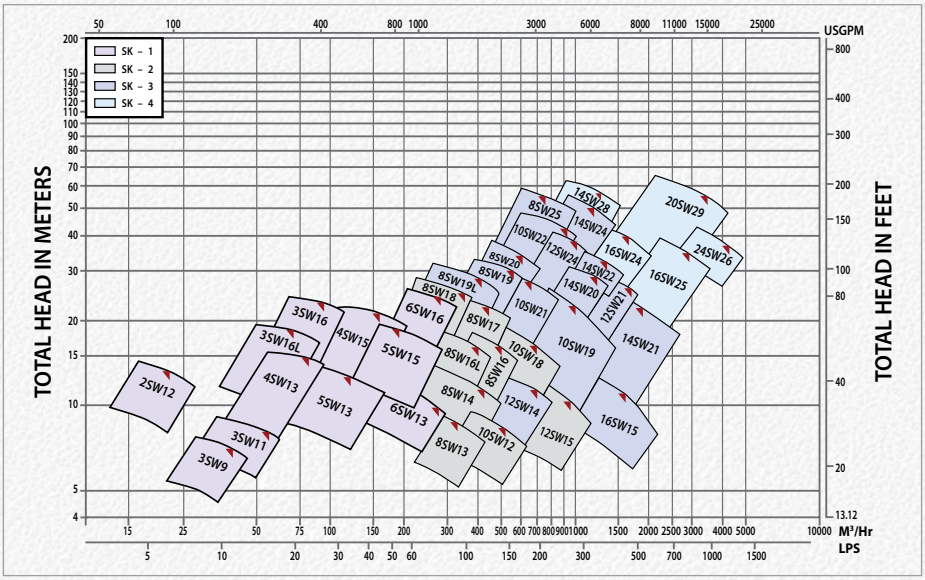

CAPACITY

RANGE CHART OF DRY PIT SEWAGE PUMPS (SW SERIES)

SINGLE STAGE SEWAGE PUMPS WITH SINGLE ENTRY IMPELLERS (Speed 750 RPM - 50 Hz, 8 Pole)

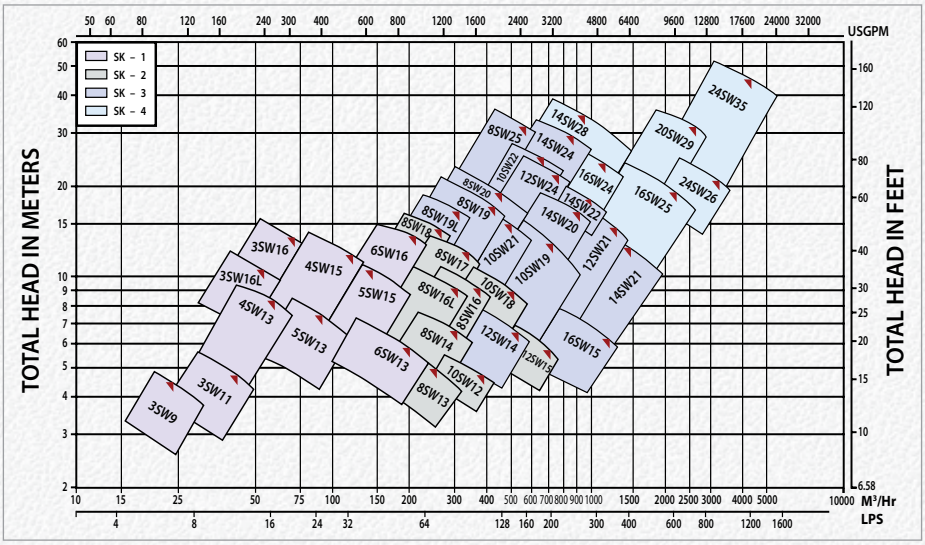

CAPACITY

Horizontal Dry Pit Non-Clog Sewage Pump

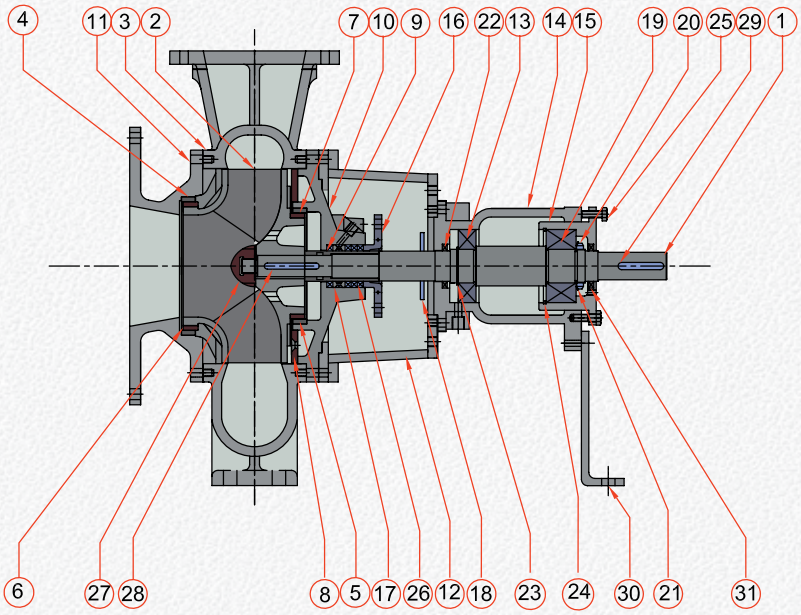

SL.NO	DESCRIPTION	PART NO.
1	Shaft	101
2	Impeller	102M
3	Casing	183M
4	Front Casing Wear Ring	220-A
5	Back Casing Wear Ring	222-B
6	Front Impeller Wear Ring	231-A
7	Back Impeller Wear Ring	232-B
8	Back wear plate	330
9	Shaft Sleeve	150
10	Stuffing Box Cover	323
11	Suction Cover	322
12	Bearing Pedestal	320
13	Inboard Bearing	214
14	Bearing Housing	256
15	Bearing Carrier	318
16	Split Gland	144
17	Lantern Ring	149
18	Water Thrower	145
19	Outboard Bearing	215
20	Lock Nut	141
21	Lock Washer	142
22	Oil Seal for Bearing Housing (P.E.)	174
23	Circlip for Inboard Bearing	337
24	Circlip for outboard Bearing	336
25	Adjusting Screw	-
26	Gland Packing	143
27	Impeller Nose Cap	218
28	Impeller key	180
29	Coupling Ket	138
30	Support Foot	217
31	Oil Seal for Bearing carrier (P.E)	325

SL.NO	DESCRIPTION	PART NO.
1	Shaft	177
2	Impeller	102M
3	Casing	178M
4	Front Casing Wear Ring	220-A
5	Back Casing Wear Ring	222-B
6	Front Impeller Wear Ring	231-a
7	Back Impeller Wear Ring	232-b
8	Back wear plate	330
9	Shaft Sleeve	150
10	Stuffing Box Cover	323
11	Suction Bend Cover	322
12	Bearing Pedestal	320
13	Inboard Bearing	162
14	Motor Stool	172
15	Suction Bend	321
16	Pump Stool	171
17	Bearing Housing	317
18	Bearing Carrier	318
19	Split Gland	336
20	Lantern Ring	149
21	Water Thrower	169
22	Outboard Bearing	195
23	Lock Nut	163
24	Lock Washer	164
25	Oil Seal for Bearing Housing (P.E.)	174
26	Circlip for Inboard Bearing	337
27	Circlip for outboard Bearing	336
28	Adjusting Screw	-
29	Gland Packing	143
30	Impeller Nose Cap	218
31	Impeller key	180
32	Coupling Key	138
33	Suction Bend Hand Hole Cover	327
34	Casing Hand Hole Cover	328
35	Oil Seal for Bearing Carrier (P.E.)	325

Vertical Dry Pit Non-Clog Sewage Pump

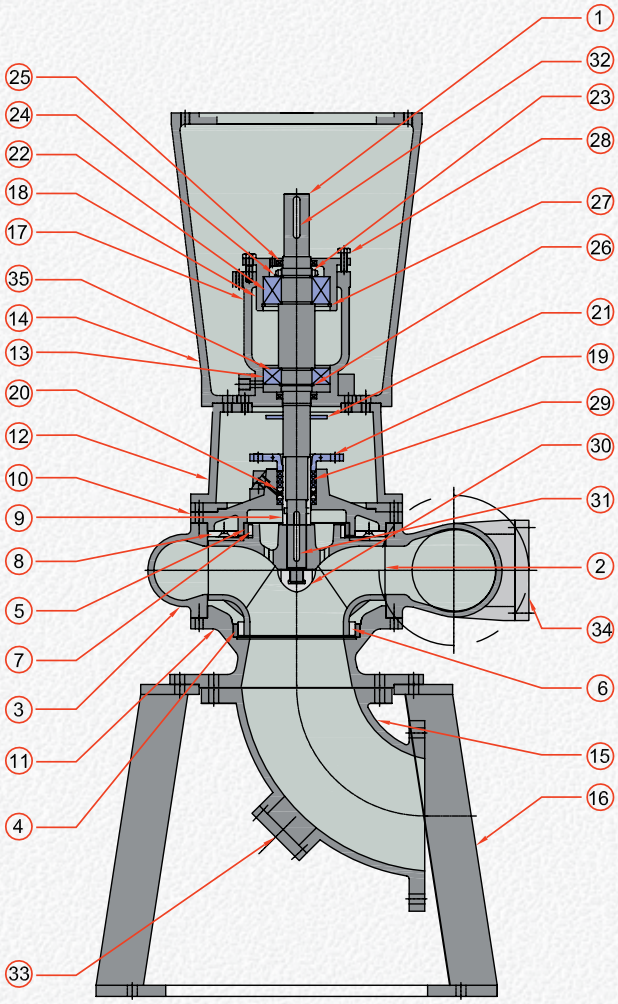

MAJOR FEATURES OF CONSTRUCTION

KEY AND KEY-WAY:
The key in the shaft is liberally designed to transmit power from driver (motor/engine) to the pump with the help of a flexible coupling coupled to the driver shaft.

OIL SEAL:
Oil seals are used to prevent contamination of lubricant in bearing area.

PACKING:
The sewage pumps are generally provided with gland packing type of seals. Usually, the sealing for this packing is done by pumping liquid or external fresh water supply. We used Carrara Make PTFE packing for sewage application.

SHAFT SLEEVE:
The pump shaft is fitted with a renewable shaft sleeve to minimize shaft wear. The sleeve is sealed at the impeller to prevent ingress of pumped liquid on the shaft. An additional function of the shaft sleeve is to increase the stiffness of the rotating assembly, thereby reducing shaft deflection at the stuffing box. This has beneficial effects on seal and bearing lives.

CASING THICKNESS:
To withstand the erosion, shock and impact load due to the solid liquid mixture discharged by the impeller, higher allowance on the casing wall thickness is the necessary design feature.

IMPELLER NUT:
Positively locks impeller to the shaft. Prevents "back off" during accidental reverse motor rotation.

NON-CLOG IMPELLER:
The design of the impeller is governed by the solid content and the maximum size which should pass through. This results in fewer number of vanes. Generally, number of vanes is limited to 3. For closed type impeller scavenging vanes are provided to avoid the settlement of solid in low-pressure region.

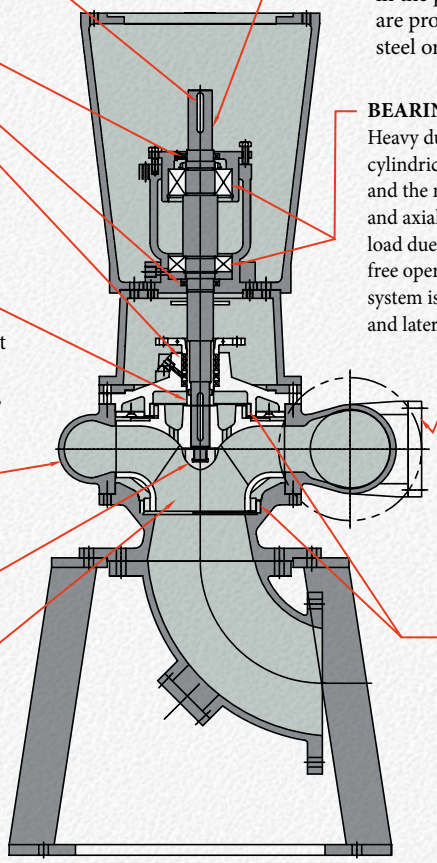

SHAFT:
The shafts are sturdy and designed with high stiffness (low L^3/D^4 ratio). The design ensures deflection of less than 0.05 mm at the seal areas under normal running conditions. The shaft is dimensioned to ensure bearing life of more than 40,000 operating hours when run in the preferred operating region. All shafts are protected by replaceable sleeves in stainless steel or copper alloys.

BEARING:
Heavy duty angular contact matched pair bearing and cylindrical roller bearings are used at the drive end and the non-drive ends respectively, to carry the radial and axial loads imposed on the impeller and also the load due to coupling movement. It ensures the trouble free operation and reliability of working. Bearing system is designed to keep the shaft axial movement and lateral deflection within acceptable limits.

CASING HAND HOLE COVER:
Another essential feature of the sewage pump casing is the provision of inspection windows. This is absolutely necessary to remove any blockages which may occur during working of the pump. Usually a jet of water is used for this purpose.

CASING WEAR RING/IMPELLER WEAR RING:
The pump casing and back covers are fitted with replaceable wear ring to minimize abrasive and corrosive wear to the casing while minimizing leakage losses. Additionally, Impeller rings are provided as optional extras for demanding applications. Galling properties are taken into consideration while selecting the wear ring materials and their clearances at the rotating elements.

Typical Dry Pit Sewage Pump Installation in a Site

GENERAL ARRANGEMENT DRAWING FOR HORIZONTAL SEWAGE PUMPS

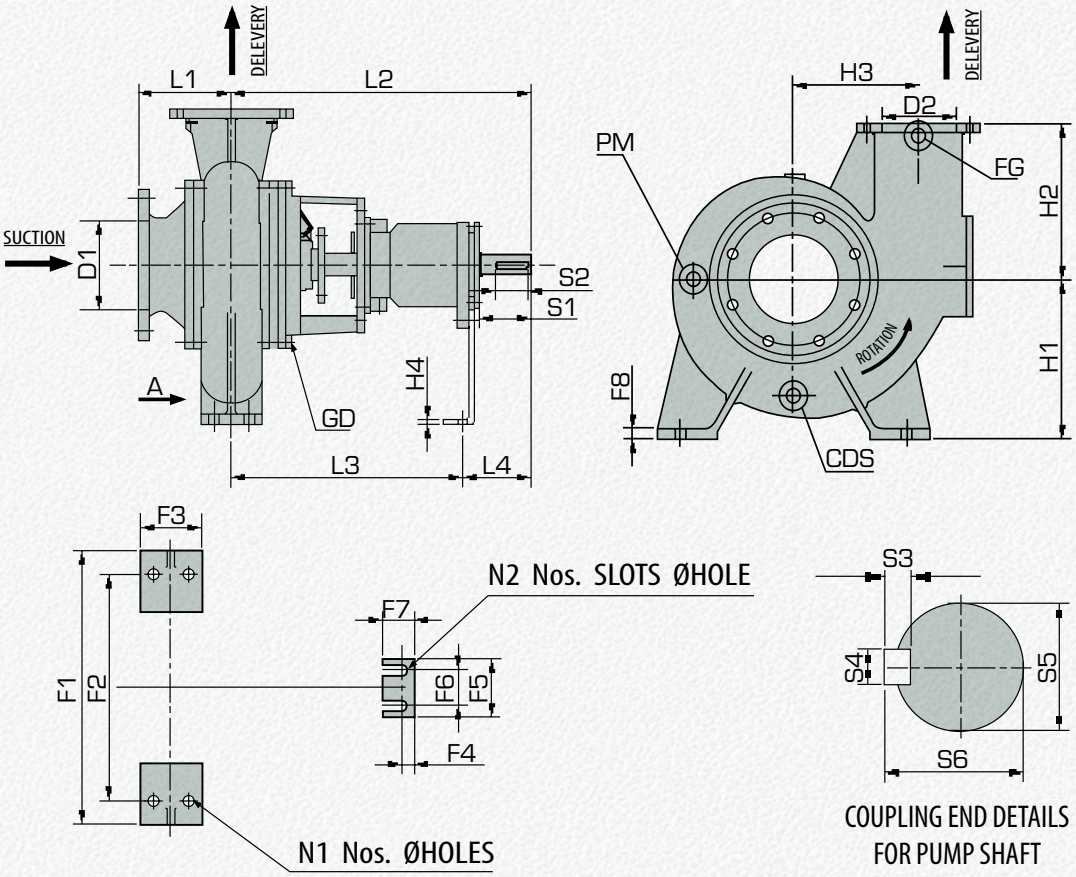

GENERAL DIMENSIONS FOR HORIZONTAL NON-CLOG SEWAGE PUMPS

SL. No.	PUMP MODEL	PUMP SIZE	BRANCH SIZE		SHAFT GROUP	OVER ALL DIMENSIONS							BASE DIMENSIONS													SHAFT DETAILS						APPROX. WEIGHT (kg.) of BARE PUMP
			D_1	D_2		L1	L2	L3	L4	H1	H2	H3	F1	F2	F3	F4	F5	F6	F7	F8	F9	F10	N1	N2	Ø Hole	S1	S2	S3	S4	S5	S6	
1	2SW12	80X50-300	80	50	SK-1	150	470	340	130	225	280	100	350	250	125	35	155	110	95	22	12	80	4	2	18	116	75	9	14	45	49	162
2	3SW9	100X80-238	100	80	SK-1	150	475	340	135	180	250	112	350	250	125	35	155	110	95	22	12	80	4	2	18	116	75	9	14	45	49	195
3	3SW11	100X80-258	100	80	SK-1	160	475	340	135	225	280	120	350	250	125	35	155	110	95	22	12	80	4	2	18	116	75	9	14	45	49	165
4	3SW16	100X80-400	100	80	SK-1	160	475	340	135	280	355	120	400	350	135	37	155	110	100	22	12	80	4	2	18	116	75	9	14	45	49	225
5	3SW16L	100X80-300	100	80	SK-1	160	475	340	135	250	315	120	400	350	135	37	155	110	100	22	12	80	4	2	18	116	75	9	14	45	49	220
6	4SW13	125X100-320	125	100	SK-1	180	495	340	155	225	200	171	500	410	130	37	140	115	100	22	12	80	4	2	18	116	75	9	14	45	49	190
7	4SW15	125X100-385	125	100	SK-1	134	495	340	155	275	225	208	525	430	130	37	140	115	100	22	12	80	4	2	18	116	75	9	14	45	49	218
8	5SW13	150X125-330	150	125	SK-1	150	505	340	165	285	250	175	575	485	140	37	150	125	100	22	12	80	4	2	18	116	75	9	14	45	49	223
9	5SW15	150X125-380	150	125	SK-1	150	505	340	165	285	250	175	575	485	140	37	150	125	100	22	12	80	4	2	18	116	75	9	14	45	49	245
10	6SW13	200X150-340	200	150	SK-1	205	776	636	140	360	353	282	615	510	140	37	150	125	100	22	12	80	4	2	18	116	75	9	14	45	49	382
11	6SW16	200X150-422	200	150	SK-1	260	776	636	140	360	353	282	615	510	140	37	150	125	100	24	12	80	4	2	18	116	75	9	14	45	49	343
12	8SW13	250X200-340	250	200	SK-2	205	776	636	140	360	353	282	615	510	140	37	150	125	100	22	12	80	4	2	18	176	110	11	18	60	64	420
13	8SW14	250X200-350	250	200	SK-2	220	776	636	140	370	365	295	615	510	140	37	150	125	100	24	12	80	4	2	22	176	110	11	18	60	64	440
14	8SW16	250X200-396	250	200	SK-2	240	805	640	165	412	390	315	700	615	160	48	150	125	130	24	12	80	4	2	22	176	110	11	18	60	64	455
15	8SW16L	250X200-400	250	200	SK-2	240	805	640	165	412	390	315	700	615	160	48	150	125	130	24	12	80	4	2	22	176	110	11	18	60	64	470
16	8SW17	250X200-438	250`	200	SK-2	220	805	640	165	412	390	315	700	615	160	48	150	125	130	24	12	80	4	2	22	176	110	11	18	60	64	455
17	8SW18	250X200-451	250	200	SK-2	220	805	640	165	412	390	315	700	615	160	48	150	125	130	24	12	80	4	2	22	176	110	11	18	60	64	525
18	8SW19L	250X200-500	250	200	SK-3	220	828	648	180	490	420	700	700	615	160	48	150	125	130	24	15	80	4	2	22	173	115	14	22	80	85.5	840
19	8SW19	250X200-482	250	200	SK-3	225	828	648	180	485	412	350	700	615	160	48	150	125	130	24	15	80	4	2	22	173	115	14	22	80	85.5	763
20	8SW20	250X200-510	250	200	SK-3	225	828	648	180	500	430	350	700	615	160	48	150	125	130	24	15	80	4	2	22	173	115	14	22	80	85.5	820
21	8SW25	250X200-630	250	200	SK-3	250	828	648	180	500	430	350	700	615	160	48	150	125	130	24	15	80	4	2	22	173	115	14	22	80	85.5	910
22	10SW12	300X250-305	300	250	SK-2	230	824	625	199	450	400	379	820	680	190	48	160	130	130	24	15	80	4	2	22	176	110	11	18	60	64	735
23	10SW18	300X250-432.5	300	250	SK-2	234	824	625	199	505	487	379	820	680	190	48	160	130	130	24	15	80	4	2	22	105	110	11	18	60	64	623
24	10SW19	300X250-480	300	250	SK-3	245	845	645	200	502	450	382	825	690	200	56	160	130	150	30	15	80	4	2	28	173	115	14	22	80	85.5	840
25	10SW21	300X250-520	300	250	SK-3	260	877	675	202	522	470	385	825	690	200	56	160	130	150	30	15	80	4	2	28	173	115	14	22	80	85.5	930
26	10SW22	300X250-560	300	250	SK-3	265	877	675	202	515	455	385	825	690	200	56	160	130	150	30	15	80	4	2	28	173	115	14	22	80	85.5	1050
27	12SW14	350X300-357	350	300	SK-3	280	898	690	208	495	440	388	900	750	230	56	180	140	150	30	15	80	4	2	28	173	115	14	22	80	85.5	686
28	12SW15	350X300-388	350	300	SK-2	280	898	690	208	518	460	388	900	750	230	56	180	140	150	30	15	80	4	2	28	176	110	11	18	60	64	750
29	12SW21	350X300-533	350	300	SK-3	350	940	736	204	520	485	395	908	750	230	56	180	140	150	34	15	80	4	2	32	173	115	14	22	80	85.5	850
30	12SW24	350X300-600	350	300	SK-3	360	940	736	204	505	475	395	908	750	230	56	180	140	150	34	15	80	4	2	32	173	115	14	22	80	85.5	975
31	14SW20	400X350-515	400	350	SK-3	412	945	741	204	515	400	405	960	800	230	56	180	140	150	34	15	80	4	2	32	173	115	14	22	80	85.5	931
32	14SW21	400X350-525	400	350	SK-3	355	940	736	204	520	485	395	908	750	230	56	180	140	150	34	15	80	4	2	32	173	115	14	22	80	85.5	940
33	14SW22	400X350-550	400	350	SK-3	412	945	741	204	533	450	420	960	800	230	56	180	140	150	34	15	80	4	2	32	173	115	14	22	80	85.5	998
34	14SW24	400X350-627	400	350	SK-3	480	1015	765	250	535	450	650	960	800	230	65	180	140	175	36	15	80	4	2	32	173	115	14	22	80	85.5	1015
35	14SW28	400X350-720	400	350	SK-4	300	1485	1285	200	720	500	700	1000	890	250	65	190	150	175	36	15	80	4	2	32	194	150	14	25	95	100	1092
36	16SW15	400X400-384	400	400	SK-3	243	715	507	208	518	460	388	900	750	230	56	180	140	150	36	15	80	4	2	32	173	115	14	22	80	85.5	910
37	16SW24	500X400-609	500	400	SK-3	505	1057	792	265	575	950	750	1000	890	250	65	190	150	175	36	15	80	4	2	38	194	150	14	25	95	100	1120
38	16SW25	500X400-639	500	400	SK-4	575	1100	824	276	595	950	840	1000	890	250	65	190	150	175	36	15	80	4	2	38	185	110	18	25	95	104.5	1170
39	20SW29	600X500-748	600	500	SK-4	605	1130	850	280	613	1055	925	1050	925	285	65	210	180	175	40	15	80	4	2	38	194	150	14	25	95	100	1946
40	24SW26	600X600-667	600	600	SK-4	645	1180	895	285	633	1150	980	1050	925	285	65	210	180	175	40	15	80	4	2	38	194	150	14	25	95	100	2170
41	24SW35	700X600-875	700	600	SK-4	645	1250	950	300	700	1270	1000	1050	925	285	65	210	180	175	40	15	80	4	2	38	194	150	14	25	95	100	2310

GENERAL ARRANGEMENT DRAWING FOR VERTICAL SEWAGE PUMPS WITH MOTORS

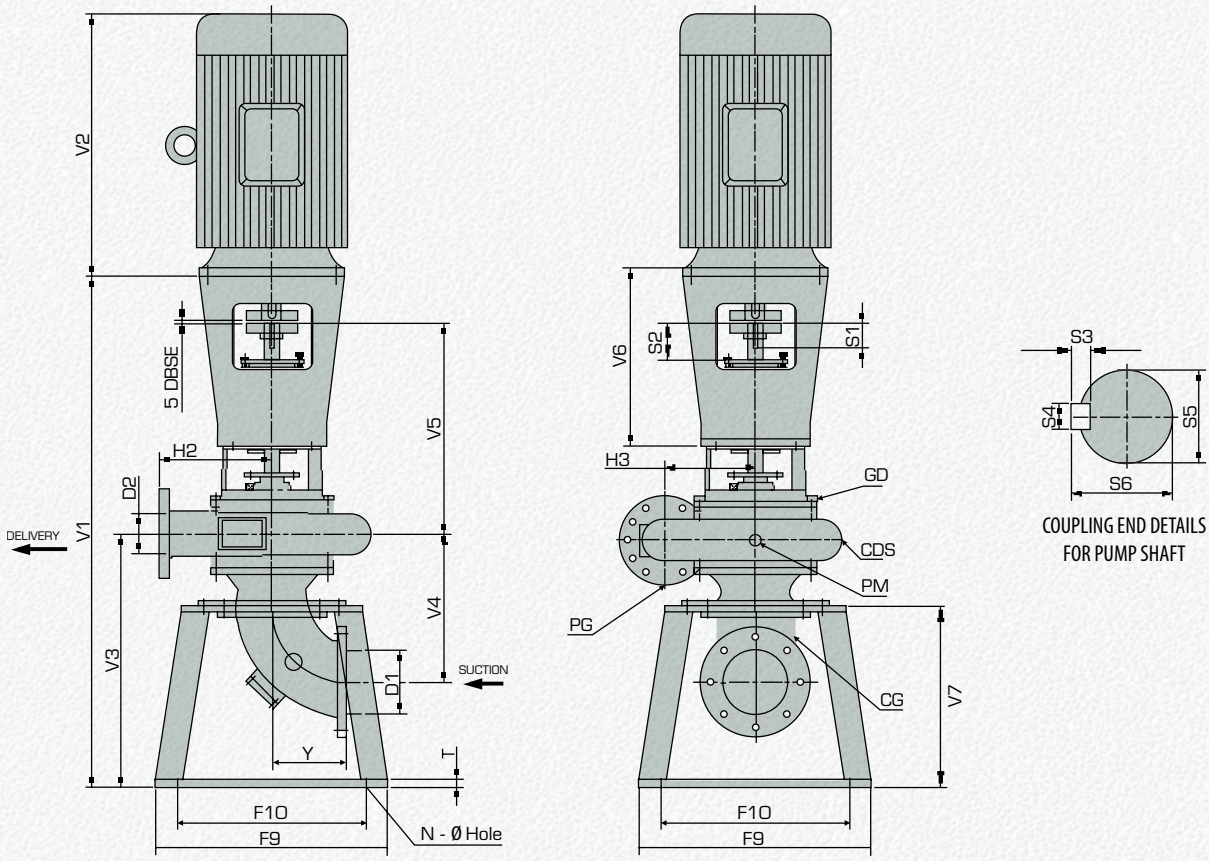

GENERAL DIMENSIONS FOR VERTICAL NON-CLOG SEWAGE PUMPS

SL. No.	PUMP MODEL	PUMP SIZE	SIZE		SHAFT GROUP	OVER ALL DIMENSIONS									BASE DIMENSIONS						SHAFT DETAILS						APPROX. WEIGHT (kg.) of BARE PUMP
			D_1	D_2		V1	V2	V3	V4	V5	V6	V7	H2	H3	F9	F10	Y	T	N	Ø Hole	S1	S2	S3	S4	S5	S6	
1	2SW12	80X50-300	80	50	SK-1	1093	Refer Motor GA Drawing	475	285	503	533	415	280	100	475	430	210	22	4	18	75	116	9	14	45	48.5	225
2	3SW9	100X80-238	100	80	SK-1	1093		475	285	503	533	415	250	112	475	430	210	22	4	18	75	116	9	14	45	48.5	275
3	3SW11	100X80-258	100	80	SK-1	1093		475	308	503	533	415	280	120	475	430	210	22	4	18	75	116	9	14	45	48.5	235
4	3SW16	100X80-400	100	80	SK-1	1093		475	308	503	533	415	355	120	475	430	210	22	4	18	75	116	9	14	45	48.5	322
5	3SW16L	100X80-300	100	80	SK-1	1093		475	308	503	533	415	315	120	475	430	210	22	4	18	75	116	9	14	45	48.5	315
6	4SW13	125X100-320	125	100	SK-1	1093		475	325	503	533	415	200	171	475	430	210	22	4	18	75	116	9	14	45	48.5	275
7	4SW15	125X100-385	125	100	SK-1	1122		488	325	519	528	395	225	208	475	430	208	22	4	18	75	116	9	14	45	48.5	310
8	5SW13	150X125-330	150	125	SK-1	1122		488	325	519	528	395	250	175	475	430	208	22	4	18	75	116	9	14	45	48.5	315
9	5SW15	150X125-380	150	125	SK-1	1122		488	325	519	528	395	250	175	475	430	208	22	4	18	75	116	9	14	45	48.5	350
10	6SW13	200X150-340	200	150	SK-1	1586		765	441	676	527	560	353	282	720	590	230	22	4	18	75	116	9	14	45	48.5	545
11	6SW16	200X150-422	200	150	SK-1	1586		765	441	676	527	560	353	282	720	590	230	24	4	18	75	116	9	14	45	48.5	490
12	8SW13	250X200-340	250	200	SK-2	1450		775	530	850	550	575	353	282	720	590	350	22	4	18	110	176	11	18	60	64.0	600
13	8SW14	250X200-350	250	200	SK-2	1450		775	530	850	550	575	365	295	720	590	350	24	4	22	110	176	11	18	60	64.0	630
14	8SW16	250X200-396	250	200	SK-2	1450		780	530	850	550	575	390	315	720	590	350	24	4	22	110	176	11	18	60	64.0	650
15	8SW16L	250X200-400	250	200	SK-2	1480		780	580	930	550	575	390	315	720	590	350	24	4	22	110	176	11	18	60	64.0	665
16	8SW17	250X200-438	250`	200	SK-2	1480		780	580	930	550	575	390	315	720	590	350	24	4	22	110	176	11	18	60	64.0	700
17	8SW18	250X200-451	250	200	SK-2	1480		780	580	930	550	575	390	315	720	590	350	24	4	22	110	176	11	18	60	64.0	750
18	8SW19L	250X200-500	250	200	SK-3	2140		999	565	930	770	720	420	350	832	688	280	24	4	22	115	173	14	22	80	85.5	1200
19	8SW19	250X200-482	250	200	SK-3	2140		999	565	930	770	720	412	350	832	688	280	24	4	22	115	173	14	22	80	85.5	1090
20	8SW20	250X200-510	250	200	SK-3	2140		999	565	930	770	720	430	350	832	688	280	24	4	22	115	173	14	22	80	85.5	1165
21	8SW25	250X200-630	250	200	SK-3	2140		999	565	930	770	720	430	350	832	688	280	24	4	22	115	173	14	22	80	85.5	1300
22	10SW12	300X250-305	300	250	SK-2	1946		948	513	823	689	720	400	379	832	702	300	24	4	22	110	176	11	18	60	64.0	1050
23	10SW18	300X250-432.5	300	250	SK-2	1946		948	513	823	689	720	487	379	832	702	300	24	4	22	110	105	11	18	60	64.0	890
24	10SW19	300X250-480	300	250	SK-3	2388		1173	723	1000	776	942	450	382	1045	900	300	30	4	28	115	173	14	22	80	85.5	1200
25	10SW21	300X250-520	300	250	SK-3	2232		1064	650	952	771	720	470	385	1045	900	300	30	4	28	115	173	14	22	80	85.5	1325
26	10SW22	300X250-560	300	250	SK-3	2232		1064	650	952	771	720	455	385	1045	900	300	30	4	28	115	173	14	22	80	85.5	1500
27	12SW14	350X300-357	350	300	SK-3	2232		1064	650	952	771	720	440	388	1045	900	325	30	4	28	115	173	14	22	80	85.5	980
28	12SW15	350X300-388	350	300	SK-2	1946		955	513	823	689	720	460	388	1045	900	325	30	4	28	110	176	11	18	60	64.0	1075
29	12SW21	350X300-533	350	300	SK-3	2252		1094	695	983	731	800	485	395	1045	900	325	34	4	32	115	173	14	22	80	85.5	1215
30	12SW24	350X300-600	350	300	SK-3	2191		1077	688	939	725	720	475	395	1045	900	325	34	4	32	115	173	14	22	80	85.5	1395
31	14SW20	400X350-515	400	350	SK-3	2332		1212	813	945	725	800	400	405	1045	900	395	34	4	32	115	173	14	22	80	85.5	1330
32	14SW21	400X350-525	400	350	SK-3	2252		880	745	1080	750	800	485	395	1045	900	395	34	4	32	115	173	14	22	80	85.5	1345
33	14SW22	400X350-550	400	350	SK-3	2332		1212	813	945	725	800	450	420	1045	900	395	34	4	32	115	173	14	22	80	85.5	1425
34	14SW24	400X350-627	400	350	SK-3	2332		1212	800	1110	725	800	450	650	1150	1000	395	36	4	32	115	173	14	22	80	85.5	1450
35	14SW28	400X350-720	400	350	SK-4	2510		1250	850	1170	795	865	500	700	1300	1100	395	36	4	32	150	194	14	25	95	100	1560
36	16SW15	400X400-384	400	400	SK-3	2332		1212	800	1110	725	800	460	388	1150	1000	395	36	4	32	115	173	14	22	80	85.5	1300
37	16SW24	500X400-609	500	400	SK-4	2510		1250	850	1170	795	865	950	750	1300	1100	475	36	4	38	150	194	14	25	95	100	1600
38	16SW25	500X400-639	500	400	SK-4	2510		1250	850	1170	795	865	950	840	1300	1100	475	36	4	38	185	110	18	25	95	104.5	1665
39	20SW29	600X500-748	600	500	SK-4	2620		1275	875	1195	830	895	1055	925	1300	1100	575	40	4	38	150	194	14	25	95	100	2780
40	24SW26	600X600-667	600	600	SK-4	2620		1275	875	1195	830	895	1150	980	1300	1100	575	40	4	38	150	194	14	25	95	100	3100
41	24SW35	700X600-875	700	600	SK-4	2620		1275	875	1195	830	895	1270	1000	1300	1100	675	40	4	38	150	194	14	25	95	100	3300

MATERIAL EQUIVALENCE CHART

PART N0	PART NAME	STANDARD FITTED PUMP	BRITISH STANDARD	ASTM STANDARD	DIN STANDARD	DIN MATERIAL NUMBER	DIN SPECIFICATION
1	Casing	Cast Iron	BS EN 1561 Grade 250	A48 Class 35	GG25	0.6025	DIN1691
2	Impeller	Cast Iron	BS EN 1561 Grade 250	A48 Class 35	GG25	0.6025	DIN1691
3	Front Casing Wear Ring	Bronze	BS1400 LB2	B584 C93700	CuSn10Pb10-C	2.1182.03	DIN1705
4	Back Casing Wear Ring	Bronze	BS1400 LB2	B584 C93700	CuSn10Pb10-C	2.1182.03	DIN1705
5	Front Impeller Wear Ring	Bronze	BS1400 LG2	B584 C83600	CuSn5Zn5Pb5-C	2.1096.01	DIN 1705
6	Back Impeller Wear Ring	Bronze	BS1400 LG2	B584 C83600	CuSn5Zn5Pb5-C	2.1096.01	DIN 1705
7	Shaft	Stainless Steel	BS970 410 S21	A276 Type 410	X 10 Cr 13	1.4006	DIN1705
8	Suction Bend	Cast Iron	BS EN 1561 Grade 250	A48 Class 35	GG25	0.6025	DIN1691
9	Suction Cover	Cast Iron	BS EN 1561 Grade 250	A48 Class 35	GG25	0.6025	DIN1691
10	Stuffing Box Cover	Cast Iron	BS EN 1561 Grade 250	A48 Class 35	GG25	0.6025	DIN1691
11	Back Cover With Stuffing Box	Cast Iron	BS EN 1561 Grade 250	A48 Class 35	GG25	0.6025	DIN1691
12	Back Cover	Cast Iron	BS EN 1561 Grade 250	A48 Class 35	GG25	0.6025	DIN1691
13	Bearing Bracket	Cast Iron	BS EN 1561 Grade 250	A48 Class 35	GG25	0.6025	DIN1691
14	Bearing Housing	Cast Iron	BS EN 1561 Grade 250	A48 Class 35	GG25	0.6025	DIN1691
15	Bearing Carrier	Cast Iron	BS EN 1561 Grade 250	A48 Class 35	GG25	0.6025	DIN1691
16	Bearing Carrier Cover	Cast Iron	BS EN 1561 Grade 250	A48 Class 35	GG25	0.6025	DIN1691
17	Baering End Cover (f.e)	Cast Iron	BS EN 1561 Grade 250	A48 Class 35	GG25	0.6025	DIN1691
18	Bearing End Cover (p.e)	Cast Iron	BS EN 1561 Grade 250	A48 Class 35	GG25	0.6025	DIN 1691
19	Casing Hand Hole Cover	Cast Iron	BS EN 1561 Grade 250	A48 Class 35	GG25	0.6025	DIN1691
20	Suction Bend Hand Hole Cover	Cast Iron	BS EN 1561 Grade 250	A48 Class 35	GG25	0.6025	DIN1691
21	Front Wear Plate	Cast Iron	BS EN 1561Grade 250	A48 Class 35	GG25	0.6025	DIN1691
22	Back Wear Plate	Cast Iron	BS EN 1561 Grade 250	A48 Class 35	GG25	0.6025	DIN1691
23	Impeller Nose Cap	Stainless Steel	BS970 410 S21	A276 Type 410	X 10 Cr 13	1.4006	DIN1705
24	Gland Plate	Stainless Steel	BS3100-316 C16	ASTM A 276 Type316	X5CrNiMo1810	1.4404	
25	Lantern Ring	Bronze	BS1400 LG2	B584 C83600	G-CuSn 5 ZnPb	2.1096.01	DIN1705
26	Split Gland	Bronze	BS1400 LG2	B584 C83600	G-CuSn 5 ZnPb	2.1096.01	DIN1705
27	Impeller Key	Stainless Steel	BS970 410 S21	A276 Type 410	X 10 Cr 13	1.4006	DIN1705
28	Coupling Key	Stainless Steel	BS970 410 S21	A276 Type 410	X 10 Cr 13	1.4006	DIN1705
29	Shaft Sleeve	Bronze					
30	Motor Stool	FABRICATED STEEL					
31	Pump Stool	FABRICATED STEEL					
32	Gland Packing	PTFE Packing					
33	Mechanical Seal	Flowserve/ Burgmann/AES Equivalent					
34	Bearing	SKF/FAG					
35	Bearing Lock Nut	SKF/FAG					
36	Bearing Locking Washer	SKF/FAG					
37	Water Thrower	Neoprene Rubber					
38	O-ring	NITRILE					
39	Gasket	Vegetable Fibre Based 0.5 mm Sheet					
40	Bearing Oil Seal	SKF					
41	Seal piping	3/8" dia Copper/Steel Pipe					
42	Seal Flow Control Device	Ball Valve					
43	Support Foot	FABRICATED STEEL					

OPTIONAL CONSTRUCTION

PART NO	PART NAME	SPECIAL MATERIAL	BRITISH STANDARD	ASTM STANDARD	DIN STANDARD	DIN MATERIAL NUMBER	DIN SPECIFICATION
1	Casing	Ductile Iron	BS 2789 Gr.500	A536, 60-45-12	GGG50	0.705	DIN 1693
		Cast Steel	BS 3100 Gr.A1	A216 WCB	GS- C25	1.0619	DIN17245
		Stainless Steel	BS3100-316 C16	ASTM A743 Gr.CF-8M	GX6CrNiMo165	1.4008	
		Ni Resist	BS3468 L-NiCuCr 20 2	A436 Type 1	GCl -NiCuCr1562	0.6655	
2	Impeller	Bronze	BS1400 LG2	B584 C83600	CuSn5Zn5Pb5-C	2.1096.01	DIN 1705
		Zinc Free Bronze	BS 1400 CT1	B427 C90700	G-CuSn10	2.1050.01	DIN 1705
		Stainless Steel	BS3100-316 C16	ASTM A743 Gr.CF-8M	GX6CrNiMo165	1.4008	
			BS3100-410 C21	ASTM A743 Gr.CA 15	G-X 12 Cr 14	1.4317	
3	Shaft	HT Steel	BS970-708 M40	A322 Gr4140	42 CrMo4	1.7225	DIN 17200
		Stainless Steel	BS3100-316 C16	ASTM A 276 Type316	X5CrNiMo1810	1.4404	
			BS3100-304 C15	ASTM A 276 Type304	X5 CrNi189	1.4301	

QUALITY ASSURANCE & TESTING

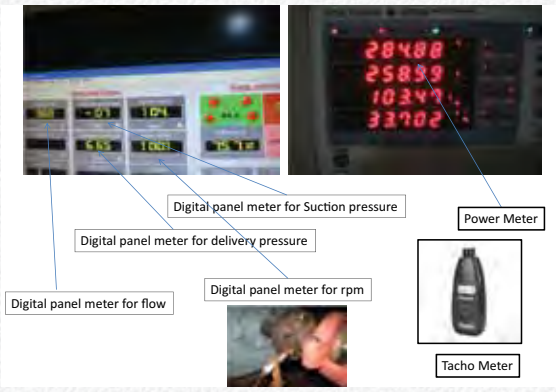

For each order executed by Pumpsense, detailed quality plan is drawn up to reflect special conditions of the order and customers' specific QA requirements. As a minimum, the following QA documents are available for each pump manufactured by Pumpsense and the customer may access these documents at any time.

1. Dimensional conformance report & "As Built" general arrangement drawing.
2. Physical and chemical test certificates for major pump components such as casing, impeller and shaft.
3. Dynamic balancing report for the rotating element.
4. Hydrostatic pressure test report
5. Seal integrity test report
6. Performance test report

In-house Non-destructive test facilities

1. Dynamic balancing machine
2. Liquid penetrant test arrangement
3. Ultrasonic test equipment

Hydrostatic Pressure Test & Seal Integrity Test

- All pump casings are pressure tested as per applicable code/customer's order.
- Fully assembled mechanical seal fitted pumps are subjected to a second hydrostatic test at the maximum allowable seal pressure or casing hydrostatic test pressure, whichever is lower, to check leak free operation of seals under pressure.

Performance Test - All pumps are tested for performance as per ISO 9906 Grade 1. Pumpsense is equipped with a state of the art test bed with the following key features:

1. **Test Tank** - The tank which is partly underground and partly over ground ensures adequate NPSHA for performance test. The tank size is 23ft(L) X 10ft(W) X 12ft(W) holds 80 m^3 of potable water for testing. The test tank has been specially designed as per the guidelines of the Hydraulic Institute Standards and is provided with necessary flow stabilizers, separate return chambers, etc. in order to ensure free suction condition.
2. **Test Lines** - There are two test lines of 250mm and 150mm capable of measuring flow up to 1500m^3/hr.
3. **Flow Measurement** - Flow measurement is done primarily by magnetic flow meters. However, the test lines are also equipped with orifice meters supported by differential pressure transducers for flow measurements/ calibration. Ultrasonic flow meter provides a third means of flow measurement in the test bed.
4. **Pressure Measurement** - This is done by both pressure transducers and bourdon type pressure gauge.
5. **Power Measurement** - Power is measured by YOKOGAWA parameter. For non-synchronous motor speeds the power is also measured by S. HIMMELSTEIN AND COMPANY torque meter.
6. **Speed** - Pump speed is measured by stroboscope.
7. **Vibration** - Vibration data is obtained by a Bruel & Kjaer vibration meter.
8. **Speed Variation** - Speed variation for testing is achieved through a 132kW VFD supplied by Ultratech.
9. **Flow control** - Flow control is achieved by actuator operating globe and butterfly valve.
10. **Data acquisition and control panel** - A specially designed control panel with the state-of-the-art instrumentation is used for data acquisition and test sheet/test curve generation. The system uses proprietary software for pump testing.
11. **NPSH test** - NPSH test is conducted by a 3% head-decay method by controlling the suction globe valves.

PUMPSENSE SW RANGE

DATA SHEET FOR PUMPSENSE SEWAGE PUMPS

		1	2	3	4	5	6	7	8	9	10	11	12	13	14	15	16	17	18	19	20	21
A. PUMP FRAME	**Unit**	**2SW12**	**3SW9**	**3SW11**	**3SW16**	**3SW16L**	**4SW13**	**4SW15**	**5SW13**	**5SW15**	**6SW13**	**6SW16**	**8SW13**	**8SW14**	**8SW16**	**8SW16L**	**8SW17**	**8SW18**	**8SW19L**	**8SW19**	**8SW20**	**8SW25**
1. Delivery Branch Size	mm	80	100	100	100	100	125	125	150	150	200	200	250	250	250	250	250`	250	250	250	250	250
2. Suction Branch Size	mm	50	80	80	80	80	100	100	125	125	150	150	200	200	200	200	200	200	200	200	200	200
3. Pump Size (Del X Suc - Imp Dia)		80X 50-300	100X 80-238	100X 80-258	100X 80-400	100X 80-300	125X 100-320	125X 100-385	150X 125-330	150X 125-380	200X 150-340	200X 150-422	250X 200-340	250X 200-350	250X 200-396	250X 200-400	250X 200-438	250X 200-451	250X 200-500	250X 200-482	250X 200-510	250X 200-630
4. Flange rating	PN10/ PN16 AS STANDARD & OTHER FLANGES ON REQUEST																					
5. Casing Material	CAST IRON BS EN 1561 GRADE 250 AS STANDARD & OTHER GRADES RECOMMENED DEPENDING UPON THE APPLICATION																					
6. Casing Thickness	mm	12	12	12	12	12	12	12	12	12	16	16	16	16	18	18	18	18	25	25	25	25
7. No. of Stages		1	1	1	1	1	1	1	1	1	1	1	1	1	1	1	1	1	1	1	1	1
8. Pump Casing Gasket	mm	0.4	0.4	0.4	0.4	0.4	0.4	0.4	0.4	0.4	0.4	0.4	0.4	0.4	0.4	0.4	0.4	0.4	0.4	0.4	0.4	0.4
B. SHAFT GROUP	**SK**	**SK-1**	**SK-1**	**SK-1**	**SK-1**	**SK-1**	**SK-1**	**SK-1**	**SK-1**	**SK-1**	**SK-1**	**SK-1**	**SK-2**	**SK-2**	**SK-2**	**SK-2**	**SK-2**	**SK-2**	**SK-3**	**SK-3**	**SK-3**	**SK-3**
C. IMPELLER & ROTOR																						
1. Maxm Impeller Diameter	mm	300	238	258	400	300	320	385	330	380	340	422	340	350	396	400	438	451	500	482	510	630
2. Weight of Impeller	Kg	25	22	24	29	26	23	33	30	33	30	50	47	50	63	68	58	69	77	80	91	98
3. Impeller Eye Diameter	mm	105	110	110.63	100	90	95	160	148	170.2	168	152	88.7	83	202	188	185	170	195	178	300	269
4. Impeller Eye Area	Sq cm	70.0	78.4	91.0	78.3	53.8	38.7	192.0	162.9	215.5	185.3	127.3	153.9	167.9	233.9	203.8	164.9	123.1	167.9	118.1	561.4	542.7
5. GD ^2 for Maximum Diameter	$Kg.m^2$	0.5	0.75	0.95	1.1	1.1	1.3	1.5	1.35	1.5	1.45	1.8	1.4	1.6	1.8	1.85	1.9	2	2.1	3	3.2	6.1
D. SHAFT AND BEARINGS																						
1. Shaft diameter at Impeller	mm	35	35	35	35	35	35	35	35	35	35	35	50	50	50	50	50	50	80	80	80	80
2. Shaft diameter at Coupling	mm	45	45	45	45	45	45	45	45	45	45	45	60	60	60	60	60	60	80	80	80	80
3. Bearing Centres	mm	154	154	154	154	154	154	154	154	154	154	154	215	215	215	215	215	215	233	233	233	233
4. Basic Design-Bearing No at DE	SKF/ FAG	3311	3311	3311	3311	3311	3311	3311	3311	3311	3311	3311	3314	3314	3314	3314	3314	3314	2 X 7322	2 X 7322	2 X 7322	2 X 7322
5. Basic Design-Bearing No at NDE	SKF/ FAG	21311	21311	21311	21311	21311	21311	21311	21311	21311	21311	21311	21314	21314	21314	21314	21314	21314	NU 322	NU 322	NU 322	NU 322
E. STUFFING BOX																						
1. Inside Diameter	mm	70	70	70	70	70	70	70	70	70	70	70	85	85	85	85	85	85	119	119	119	119
2. Type of Seal	GLAND PACKING (DOUBLE MECHANICAL SEAL- FLOWSERVE/ AES SEAL OR EQUIVALENT AS AN OPTION)																					
3. Gland Packing Size	mm	10X10	10X10	10X10	10X10	10X10	10X10	10X10	10X10	10X10	10X10	10X10	10X10	10X10	10X10	10X10	10X10	10X10	12X12	12X12	12X12	12X12
F. SERVICE LIMITS																						
1. Maxm. Working Pressure	Bar	12	12	12	12	12	12	12	12	12	12	12	12	12	12	12	12	12	12	12	16	16
2. Maxm. Hydrotest Pressure	Bar	18	18	18	18	18	18	18	18	18	18	18	18	18	18	18	18	18	18	18	24	24
3. Maxm. Suction Pressure	Bar	5	5	5	5	5	5	5	5	5	5	5	5	5	5	5	5	5	5	5	5	5
4. Max. Temp. Mechanical Seal	°C	95	95	95	95	95	95	95	95	95	95	95	95	95	95	95	95	95	95	95	95	95
5. Maxm. Speed	RPM	3000	3000	3000	3000	3000	3000	3000	3000	3000	1800	1800	1800	1800	1800	1800	1800	1800	1500	1500	1500	1500
6. Max. Solid Size	mm	30	30	30	30	30	30	50	50	50	50	50	75	75	75	75	75	75	90	90	90	90

PUMPSENSE SW RANGE

DATA SHEET FOR PUMPSENSE SEWAGE PUMPS

		22	23	24	25	26	27	28	29	30	31	32	33	34	35	36	37	38	39	40	41
A. PUMP FRAME	**Unit**	**10SW12**	**10SW18**	**10SW19**	**10SW21**	**10SW22**	**12SW14**	**12SW15**	**12SW21**	**12SW24**	**14SW20**	**14SW21**	**14SW22**	**14SW24**	**14SW28**	**16SW15**	**16SW24**	**16SW25**	**20SW29**	**24SW26**	**24SW35**
1. Delivery Branch Size	mm	300	300	300	300	300	350	350	350	350	400	400	400	400	400	400	500	500	600	600	700
2. Suction Branch Size	mm	250	250	250	250	250	300	300	300	300	350	350	350	350	350	400	400	400	500	600	600
3. Pump Size (Del X Suc - Imp Dia)		300X 250-305	300X 250-432.5	300X 250-480	300X 250-520	300X 250-560	350X 300-357	350X 300-388	350X 300-533	350X 300-600	400X 350-515	400X 350-525	400X 350-550	400X 350-627	400X 350-720	400X 400-384	500X 400-609	500X 400-639	600X 500-748	600X 600-667	700X 600-875
4. Flange rating	PN10/ PN16 AS STANDARD & OTHER FLANGES ON REQUEST																				
5. Casing Material	CAST IRON BS EN 1561 GRADE 250 AS STANDARD & OTHER GRADES RECOMMENED DEPENDING UPON THE APPLICATION																				
6. Casing Thickness	mm	18	18	18	20	20	18	20	22	20	20	20	20	22	25	16	20	20	25	32	32
7. No. of Stages		1	1	1	1	1	1	1	1	1	1	1	1	1	1	1	1	1	1	1	1
8. Pump Casing Gasket	mm	0.4	0.4	0.4	0.4	0.4	0.4	0.4	0.4	0.4	0.4	0.4	0.4	0.4	0.4	0.4	0.4	0.4	0.4	0.4	0.4
B. SHAFT GROUP	**SK**	**SK-2**	**SK-2**	**SK-3**	**SK-3**	**SK-3**	**SK-3**	**SK-2**	**SK-3**	**SK-3**	**SK-3**	**SK-3**	**SK-3**	**SK-3**	**SK-4**	**SK-3**	**SK-4**	**SK-4**	**SK-4**	**SK-4**	**SK-4**
C. IMPELLER & ROTOR																					
1. Maxm Impeller Diameter	mm	305	432.5	480	520	560	357	388	533	600	515	525	550	627	720	384	609	639	748	667	875
2. Weight of Impeller	Kg	53	58	77	85	95	45	52	104	120	110	115	119	145	185	55	175	185	209	235	285
3. Impeller Eye Diameter	mm	106	225	260	219	250	160	350	327	254	262	333	279	280	256	333	317	392	370.9	646	414.5
4. Impeller Eye Area	Sq cm	325.8	319.1	398.2	243.9	294.8	454.0	766.0	722.9	393.6	416.4	738.2	488.6	366.9	265.9	840.7	590.7	1005.8	835.3	1150.8	984.8
5. GD ^2 for Maximum Diameter	$Kg.m^2$	2.3	3.6	3.8	4	4.2	2	2.1	3	4.5	2.9	4	4.6	6.7	4.1	6.5	7.4	7.8	15	10	20
D. SHAFT AND BEARINGS																					
1. Shaft diameter at Impeller	mm	50	50	80	80	80	80	50	80	80	80	80	80	80	95	80	95	95	95	95	95
2. Shaft diameter at Coupling	mm	60	60	80	80	80	80	60	80	80	80	80	80	80	95	80	95	95	95	95	95
3. Bearing Centres	mm	215	215	233	233	233	233	215	233	233	233	233	233	233	285	233	285	285	285	285	285
4. Basic Design-Bearing No at DE	SKF/ FAG	3314	3314	2 X 7322	2 X 7322	2 X 7322	2 X 7322	3314	2 X 7322	2 X 7322	2 X 7322	2 X 7322	2 X 7322	2 X 7322	2 X 7324	2 X 7322	2 X 7324	2 X 7324	2 X 7324	2 X 7324	2 X 7324
5. Basic Design-Bearing No at NDE	SKF/ FAG	21314	21314	NU 322	NU 322	NU 322	NU 322	21314	NU 322	NU 322	NU 322	NU 322	NU 322	NU 322	NU 324	NU 322	NU 324	NU 324	NU 324	NU 324	NU 324
E. STUFFING BOX																					
1. Inside Diameter	mm	85	85	119	119	119	119	85	119	119	119	119	119	119	140	119	140	140	140	140	140
2. Type of Seal	GLAND PACKING (DOUBLE MECHANICAL SEAL- FLOWSERVE/ AES SEAL OR EQUIVALENT AS AN OPTION)																				
3. Gland Packing Size	mm	12X12	12X12	16X16	16X16	16X16	16X16	12X12	16X16	16X16	16X16	16X16	16X16	16X16	20X20	16X16	20X20	20X20	20X20	20X20	20X20
F. SERVICE LIMITS																					
1. Maxm. Working Pressure	Bar	12	12	12	12	16	12	12	16	16	12	12	16	12	16	12	12	12	12	12	12
2. Maxm. Hydrotest Pressure	Bar	18	18	18	18	24	18	18	24	24	18	18	24	18	24	18	18	18	18	18	18
3. Maxm. Suction Pressure	Bar	5	5	5	5	5	5	5	5	5	5	5	5	5	5	5	5	5	5	5	5
4. Max. Temp. Mechanical Seal	°C	95	95	95	95	95	95	95	95	95	95	95	95	95	95	95	95	95	95	95	95
5. Maxm. Speed	RPM	1500	1500	1500	1500	1500	1500	1500	1500	1500	1500	1500	1500	1000	1000	1000	1000	1000	1000	1000	750
6. Max. Solid Size	mm	90	90	100	100	100	100	100	100	115	115	115	115	115	115	115	130	130	130	130	130

OTHER PRODUCTS FROM PUMPSENSE

Bottom suction side discharge split case pump for water supply. Pump Size: 500X400-540. All our pumps can be supplied with customized branch orientation.

Two stage NFPA20 split case fire pumps incorporate two double entry impellers for high suction capability and complete axial thrust balance. The pumps are available for rated flows up to 1500 USGPM and heads up to 300 m and speed up to 3000. rpm.

Split case pump in all duplex stainless steel construction supplied to Tata Steel in the UK. Pumps can be supplied in a wide variety of materials to suit the application and liquid pumped.

Single stage double volute split case NFPA20 fire pump supplied to Shell, Australia through JACOBS with Moody-Intertek certification

Split-case marine external fire (FiFi) pumps are available in many branch orientations and materials. They are supplied with certification by ABS, Lloyds, CCS and other marine surveyors.

Standard split case range covers both single and two stage pumps for capacities up to 3000 m^3/hr and heads up to 300 m. Many customize options are available.

Large end suction pumps cover sizes between 150 mm and 400 mm for flows up to 3200 m^3/hr and heads up to 200 m. These pumps are available for air con, industrial cooling water supply, and marine fire services.

Compact and light weight end suction pumps are specially designed for ship's external fire fighting application. Pumps are supplied in material suitable for sea water such as Ni-Al-Bronze, Gunmetal and Duplex Stainless Steel. Stuffing boxes are offered with mechanical seal/ Lip seal/ Gland packing.

Test Bed at Pumpsense is fully compliant with the requirements of ISO 9906. Test set up is fully automated for data acquisition.

Marine fire pump coupled with Diesel engine in a single skid. We supply complete pump systems including driver, bases, controllers and accessories.

Pumpsense all bronze pumps for sea water application are popular. This series of pumps can be offered as clutch mounted products, and are often supplied as kits for assembly by the gear box makers.

A large range of split case NFPA-20 fire pumps both single stage and two stage is available at 3000 rpm. Few of them have been Listed by UL on behalf of our major customers.

We upgrade our product continuously. The information contained in this brochure should be used for general guidelines only since they are subject to change without notice.

PUMPSENSE FLUID ENGINEERING PVT. LTD

5/F, Hastings Court, Tower A , 96, Garden Reach Road, Kolkata – 700023, INDIA

Tel: +91-33- 24591861/1862 Fax: +91-33-24591862

Web: worldofpumps.com email: enquiries@worldofpumps.com

Quality Management System ISO 9001 : 2008

Design and manufacture of centrifugal split case, end suction, inline & mixed flow type pumps for industrial, fire fighting, marine, HVAC & sewage applications

DNV·GL