PUMPSENSE
Fluid Engineering Pvt. Ltd

NFPA®

NFPA 20 **FIRE** PUMPS

COMPLETE PUMPING SOLUTIONS FOR FIRE PROTECTION SYSTEMS

- Horizontal Split Case Single Stage and Two Stage Electric Motor Driven Fire Pumps
- Horizontal Split Case Single Stage and Two Stage Diesel Engine Driven Fire Pumps
- Vertical Split Case Electric Motor Driven Fire Pumps
- End Suction Fire Pumps
- Single Stage Inline Fire Pumps
- Fifi-Pumps for external fire fighting in ships and FPSO Fire Pumps units
- Packaged Fire Pumps Systems
- Approved and Listed Fire Pumps

FIRE PUMPS DESIGN DETAILS

A BRIEF INTRODUCTION

History of PUMPSENSE goes back to 1995 when a group of professionals working in large international pumps companies decided to team together. At PUMPSENSE, we are united through a common vision to build an excellent pumps company through which we can express ourselves fully and freely. Each one of us has an abiding interest in one aspect or the other of the pumps business – right from hydraulic design to applications engineering, product development to marketing. We also share a common conviction that with our skills, passion and commitment, we can redefine the existing norms and standards of customer satisfaction. We wish to work, learn and create value in a nourishing and fulfilling environment for our customers, business associates and ourselves. PUMPSENSE exists to fulfill this collective dream, based on a core set of values which are our guiding philosophy in creating this organization.

The business of PUMPSENSE is to provide centrifugal pumps and related services. We will constantly strive to increase the delivered value to our customer by careful attention to details, by continuous improvement of our core capabilities and by our commitment to delight the customer at every point of contact. The quality of our products and services will reflect the improvement in the quality of life that we are able to bring to our employees – we will provide them with an informal and liberal work environment, where they can constantly learn and grow. We recognize that our suppliers play a key role in the quality of our products and services. We will work closely with our suppliers so that they share our energy and focus to serve the customer with excellence. Above all, we will strive to create an organization where there are no barriers amongst customers, employees and suppliers and all of us work together to create value, to grow, to learn and to enhance the quality of our lives.

RANGE CHARTS

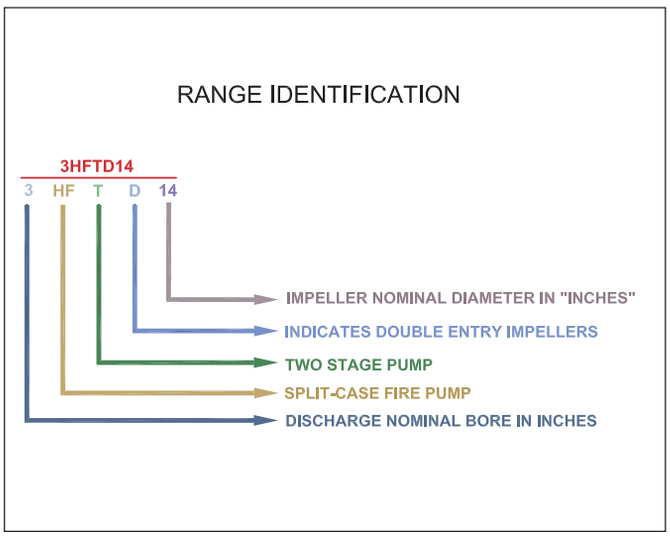

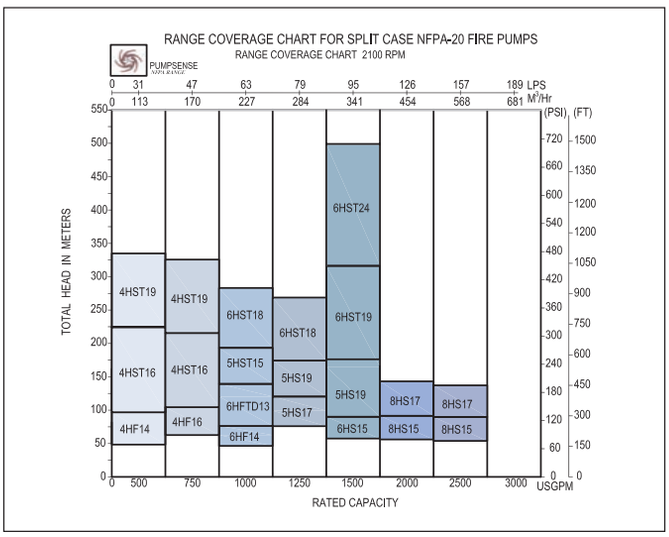

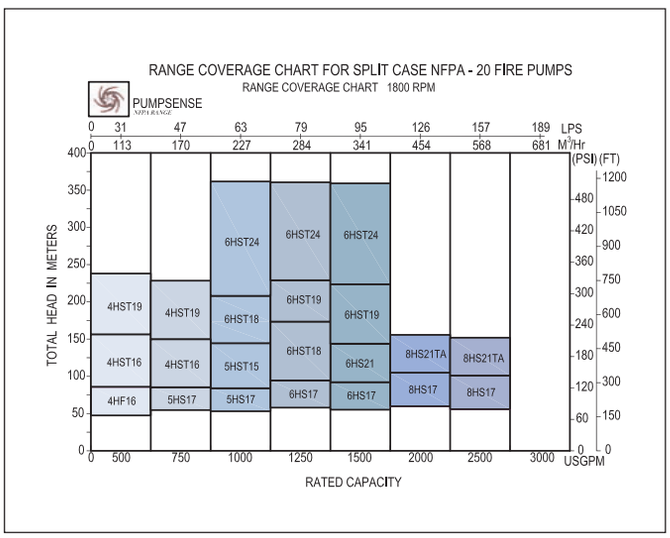

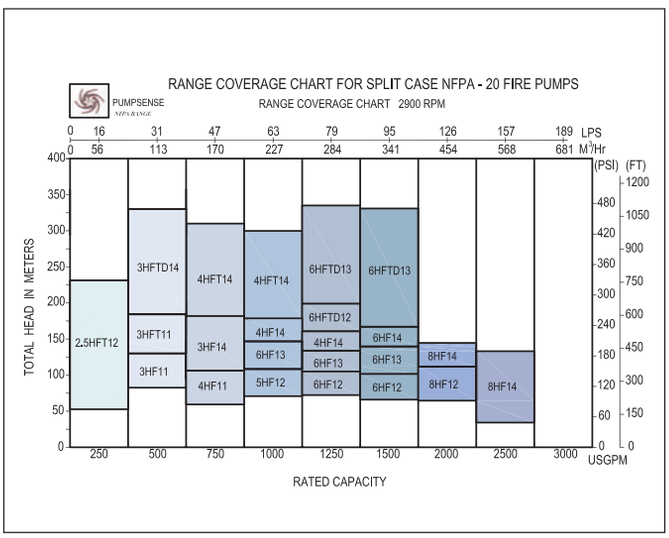

Fire pumps manufactured by Pumpsense are in full compliance with the requirements of NFPA-20. In addition, these pumps meet all the clausal requirements of established fire pumps approval standards such as FM1311 of Factory Mutual and UL448 of Underwriters Laboratories.

In particular, NFPA-20 fire pumps manufactured by Pumpsense conform to the following:

PERFORMANCE CHARACTERISTICS **SHUT-OFF HEAD** **MAXIMUM POWER**	All pumps provide not less than 150% of the rated capacity at not less than 65% of the total rated head. The closed valve head is less than 140% of the rated head and more than 99% of the rated head. For all NFPA-20 fire pumps maximum power is determined for the largest and smallest impeller and specified in the documentation to help in selecting an optimum prime mover. Most pumps have flat/ non-overloading power characteristics.	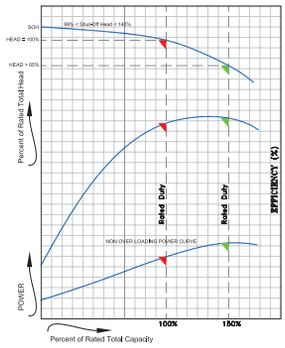
CERTIFIED SHOP TEST REPORT	All NFPA-20 fire pumps are supplied by us with certified shop test report showing head, capacity, brake horse power and efficiency of the pumps.	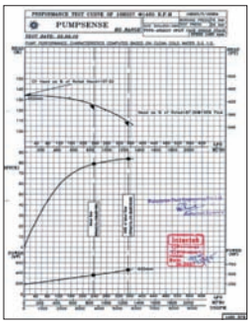 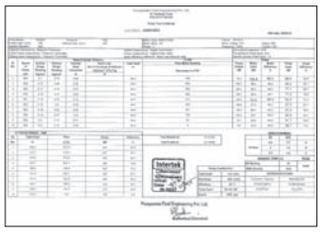
HYDROSTATIC TEST (RUPTURE TEST)	All pumps are tested with a pressure equal to, or greater than, twice the sum of the maximum shutoff pressure of the pumps plus a maximum allowable suction pressure specified by the pumps manufacturer. The test pressure shall be held for five minutes. In no case shall the maximum allowable suction pressure, be less than 75 psi, or the test be run at a pressure less than 400 psi.	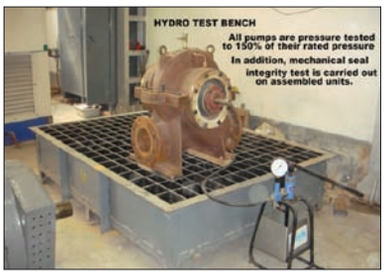
SUCTION LIFT CAPABILITY	All pumps belonging to this range are type tested to ensure that they are capable of 15 ft total suction lift at 150% of the rated flow with total head not less than 65% of the rested head.	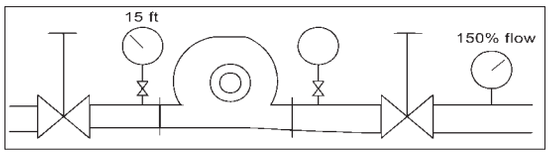
MECHANICAL RIGIDITY	Shaft design, bolt stress, bearing life, casing thickness and other mechanical indication of pumps reliability conform and exceed the minimum values stipulated in UL448 and FM1311. As a result the pumps have high mechanical reliability.	
DOUBLE VOLUTE	Single Stage Pumps with delivery branch size of 4” and above are generally provided with a double volute casing design to ensure minimum radial thrust over the entire operating range. This factor enhances shaft, bearing and packing life and overall pump reliability.	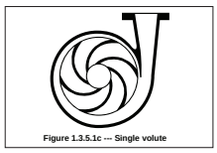 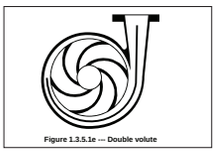 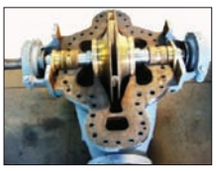

SELECTION TABLE: HORIZONTAL SPLIT CASE (HSC) FIRE PUMPS

INDUSTRIAL NFPA-20 DUTIES

DUTY DETAILS				PUMPS MODELS		
Flow		Head		2900 RPM	1800 RPM	2100 RPM
USGPM	M³ / HR.	PSI	M			
500	114	116	80	3HF11	4HF16	4HF14
		203	140	3HF11	4HST16	4HST16
		290	200	3HFT11	4HST19	4HST19
		435	300	3HFTD14	-	-
750	170	116	80	4HF11	5HS17	4HF16
		203	140	4HFT12	4HST16	4HST16
		290	200	4HFT12	4HST19	4HST19
		435	300	4HFT14	-	-
1000	227	116	80	5HF12	5HS17	6HF14
		203	140	6HF14H	5HST15	6HFT13
		290	200	4HFT14	6HST18	5HST15
		435	300	4HFT14	6HST24	6HST18
1250	284	116	80	6HF12	6HS17	5HS17
		203	140	6HF14H	6HST18	5HS19
		290	200	6HFT12	6HST19	6HST18
		435	300	6HFT13	6HST24	-
1500	341	116	80	6HF12	6HS17	6HS15
		203	140	6HF14H	6HS21	5HS19
		290	200	6HFT13	6HST19	6HST19
		435	300	6HFT13	6HST24	6HST24
2000	454	116	80	8HF12	8HS17	8HS15
		203	140	8HF14	8HS21TA	8HS17
2500	568	116	80	8HF14	8HS17	8HS15
		203	140	8HF14	8HS21TA	8HS17

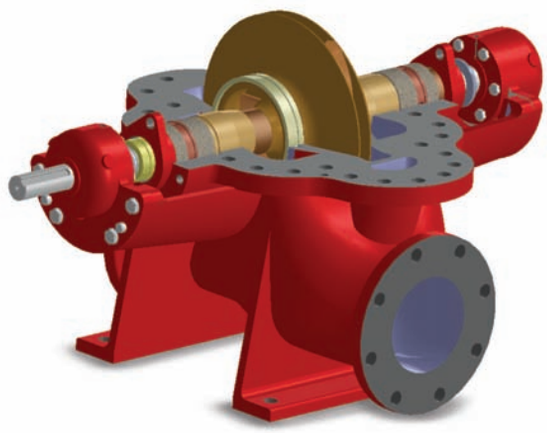

INDUSTRIAL (FM) DUTIES

DUTY DETAILS				PUMPS MODELS	
Flow		Head		1500 RPM	1800 RPM
USGPM	M³ /HR.	PSI	M		
1500	341	100-125	70-88	6HF21	6HF18
2000	341	100-140	70-96	-	8HF17
2000	454	100-125	70-88	8HF21	-
2500	568	100-135	70-93	-	8HF17

SELECTION TABLE – END SUCTION (ES) FIRE PUMPS

DUTY DETAILS				PUMPS MODEL
Flow		Pressure Range		
USGPM	M³ /HR.	PSI	M	
1780 RPM				
250	57	36-51	25-35	ES 80-250
500	114	65-84	45-58	ES 80-315
500	114	35-51	24-35	ES 100-250
750	170	68-83	47-57	ES 100-315
1000	227	32-48	22-33	ES 125-250
1000	227	65-84	45-58	ES 125-315
1900 RPM				
250	57	41-58	28-40	ES 80-250
500	114	70-96	48-66	ES 80-315
750	170	52-56	36-39	ES 100-250
750	170	72-94	50-65	ES 100-315
1000	227	33-55	23-38	ES 125-250
1000	227	68-94	47-65	ES 125-315
2100 RPM				
250	57	51-70	35-48	ES 80-250
500	114	80-120	55-83	ES 80-315
500	114	54-76	37-52	ES 100-250
750	170	87-120	60-82	ES 100-315
1000	227	44-68	30-47	ES 125-250
1000	227	78-118	54-81	ES 125-315

DUTY DETAILS				PUMPS MODEL
Flow		Pressure Range		
USGPM	M³ /HR.	PSI	M	
2350 RPM				
500	114	70-84	48-58	ES 80-250
750	170	98-150	68-104	ES 80-315
750	170	68-90	47-62	ES 100-250
750	170	100-184	69-102	ES 100-315
1250	284	50-84	35-58	ES 125-250
1250	284	106-145	73-100	ES 125-315
2600 RPM				
500	114	75-105	52-72	ES 80-250
750	170	138-176	95-122	ES 80-315
750	170	75-112	52-77	ES 100-250
750	170	116-176	80-122	ES 100-315
1250	284	65-104	45-72	ES 125-250
1250	284	119-180	82-124	ES 125-315
2950 RPM				
500	114	93-132	64-91	ES 80-250
750	170	168-228	115-158	ES 80-315
750	170	88-140	60-97	ES 100-250
750	170	148-225	102-155	ES 100-315
1250	284	84-134	58-92	ES 125-250
1250	284	150-226	104-156	ES 125-315

CROSS-SECTIONAL DRAWING OF GLAND PACKED ES FIRE PUMPS

CROSS-SECTION OF SMALL END SUCTION FIRE PUMPS (PACKED GLAND FITTED)

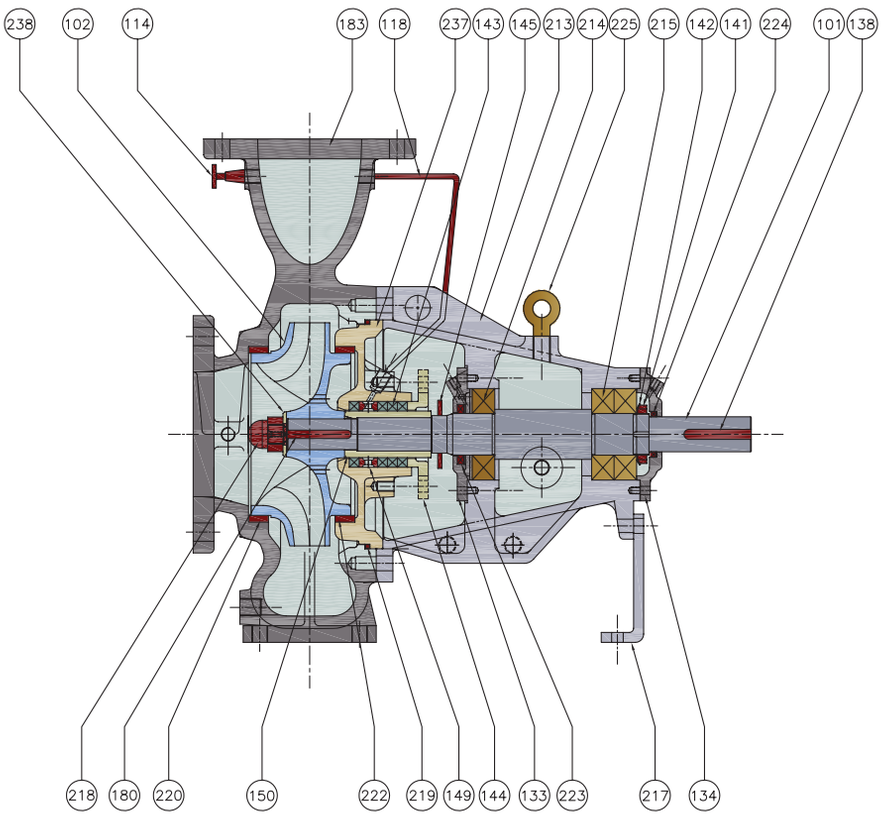

DESCRIPTION	QTY.	PART NO.
Shaft	1	101
Impeller	1	102
Casing	1	183
Back Cover	1	237
Bearing Bracket	1	213
Cylindrical Roller Ball Brg. (Inner) SKF NU XXX	1	214
Angular Contact Ball Brg. (Outer) SKF BECB XXXX	2	215
Water Thrower	1	145
Coupling Key	1	138
Bearing End Cover (F.E.)	1	133
Bearing End Cover (P.E.)	1	134
Support Foot	1	217
Impeller Key	1	180
Impeller Nose Cap / Nut	1	218
'O' Ring For Back Cover	1	219
Casing Wear Ring (Front)	1	220
Gland Packing	1 Set	143
Shaft Sleeve	1	150
Casing Wear Ring (Back)	1	222
Oil Seal For Inner Cover	1	223
Oil Seal For Outer Cover	1	224
Bearing Lock Nut (KM XX)	1	141
Bearing Lock Washer (MB XX)	1	142
Air Cock	1	114
Eye Bolt	1	225
Seal Flushing Line	1	118
Split Gland	1	144
Lantern Ring	1	149
Washer For Impeller Nut	1	238

** (P.E.): Power End, (F.E.): Free End

EXPLODED VIEW: END SUCTION (ES) FIRE PUMPS

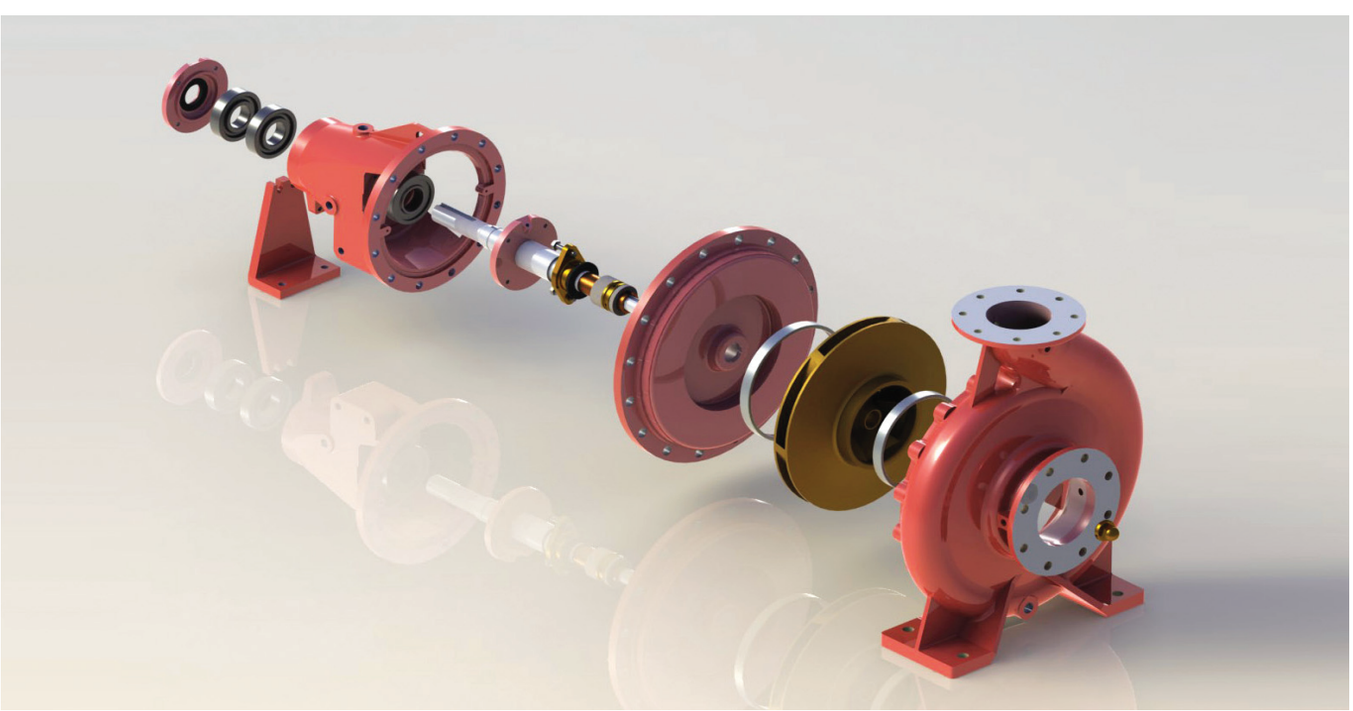

HSC FIRE PUMPS: CROSS SECTIONAL DRAWINGS

PACKED GLAND SINGLE STAGE HORIZONTAL SPLIT-CASE (HSC) FIRE PUMPS

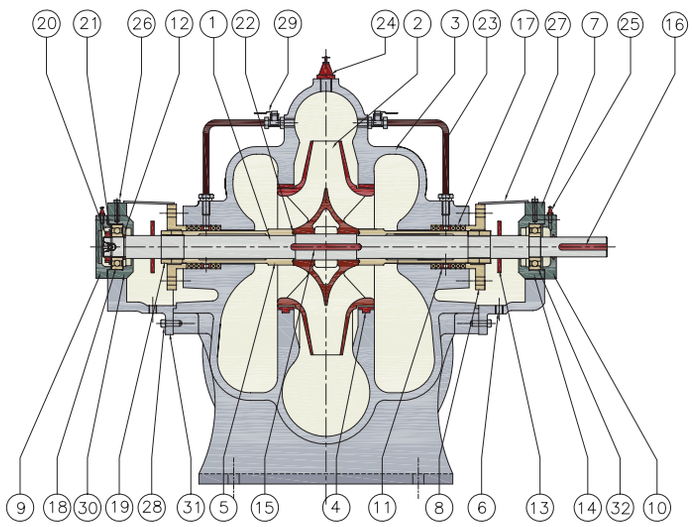

SL.No.	DESCRIPTION	QTY.	PART NO.
1	Shaft	1	101
2	Impeller	1	102
3	Casing	1	183
4	Casing Wear Ring	2	129
5	Shaft Sleeve	2	150
6	Bearing Bracket (P.E.)	1	254
7	Bearing Bracket Top Clamp	2	255
8	Split Gland	2	144
9	Bearing End Cover (F.E.)	1	133
10	Bearing End Cover (P.E.)	1	134
11	Lantern Ring	2	149
12	Thrust Collar	1	125
13	Water Thrower	2	145
14	Bearing Housing (P.E.)	1	256
15	Impeller Key	1	180
16	Coupling Key	1	138
17	Gland Packing	2 Set	143
18	Deep Groove Ball Bearing (F.E.)	1	257
19	Sleeve Nut (L.H. & R.H.)	2+2	146
20	Lock Nut	1	141
21	Lock Washer	1	142
22	'O' - Ring (Sleeve)	2	156
23	Seal Flushing Line	2	118
24	Air Release Cock	1	114
25	Grease Nipple	2	258
26	Locking Pin For Top Clamp	2	259
27	Shaft Guard	2	252
28	Dowel Pin For Bearing Bracket	4	245
29	Ball Valve	2	-
30	Bearing Housing (F.E.)	1	270
31	Bearing Bracket (F.E.)	1	271
32	Deep Groove Ball Bearing (P.E.)	1	272

** (P.E.): Power End, (F.E.): Free End

PACKED GLAND TWO STAGE HSC FIRE PUMPS WITH INTERNAL CROSS-OVER

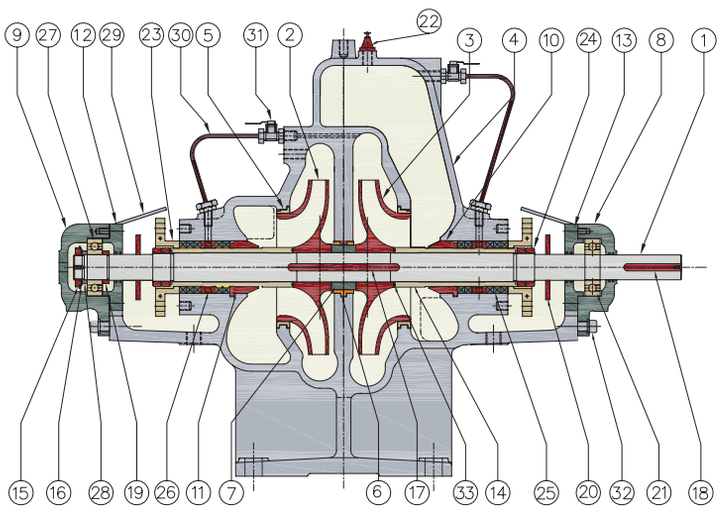

SL.No.	DESCRIPTION	QTY.	PART NO.
1	Shaft	1	101
2	Impeller 1st Stage (L.H.)	1	102-L
3	Impeller 2nd Stage (R.H.)	1	102-R
4	Casing	1	183
5	Casing Wear Ring	2	129
6	Inter Stage Bush	1	300
7	Inter Stage Collar	1	301
8	Bearing Bracket (P.E.)	1	254
9	Bearing Bracket (F.E.)	1	271
10	Stuffing Box Bush (P.E.)	1	260
11	Stuffing Box Bush (F.E.)	1	292
12	Bearing End Cover Inner (F.E.)	1	277
13	Bearing End Cover Inner (P.E.)	1	276
14	Shaft Sleeve	2	150
15	Bearing Lock Nut	1	141
16	Bearing Lock Washer	1	142
17	Impeller Key	1	180
18	Coupling Key	1	138
19	Thrust Collar	1	125
20	Water Thrower	2	145
21	Deep Groove Ball Bearing (P.E.)	1	272
22	Air Cock	2	114
23	Split Gland	2	144
24	Sleeve Nut (L.H. & R.H.)	2+2	146
25	Gland Packing	2 Set	143
26	Lantern Ring	2	149
27	Deep Groove Ball Bearing (F.E.)	1	257
28	Bearing Spacer	1	228
29	Shaft Guard	2	252
30	Water Sealing Pipe	2	118
31	Ball Valve	2	-
32	Dowel Pin for Bearing Bracket	4	245
33	'O' Ring for Sleeve	2	156

** (P.E.): Power End, (F.E.): Free End

PACKED GLAND TWO STAGE HSC FIRE PUMPS WITH EXTERNAL CROSS-OVER

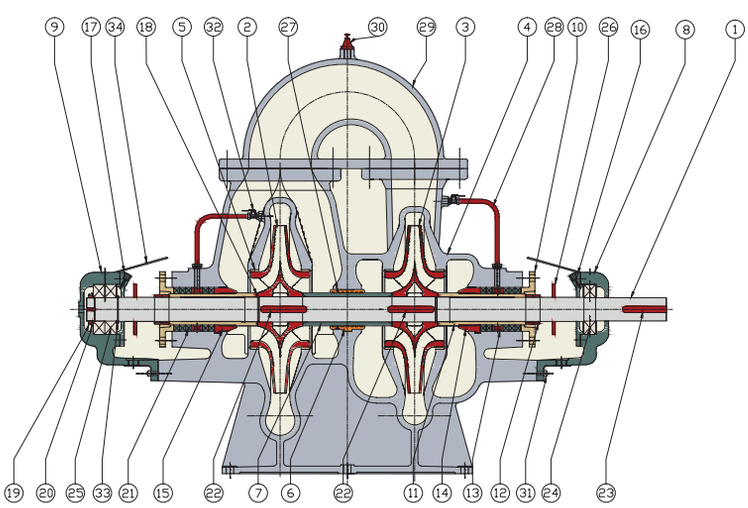

SL.No.	DESCRIPTION	QTY.	PART NO.
1	Shaft	1	101
2	Impeller 1st Stage (L.H.)	1	102-L
3	Impeller 2nd Stage (R.H.)	1	102-R
4	Casing	1	183
5	Casing Wear Ring	4	129
6	Inter Stage Bush	1	300
7	Inter Stage Collar	1	301
8	Bearing Bracket (P.E.)	1	254
9	Bearing Bracket (F.E.)	1	271
10	Split Gland	2	144
11	Shaft Sleeve	2	150
12	Sleeve Nut (L.H. & R.H.)	2+2	146
13	Lantern Ring	2	149
14	Stuffing Box Bush (P.E.)	1	260
15	Stuffing Box Bush (F.E.)	1	292
16	Bearing End Cover Inner (P.E.)	1	276
17	Bearing End Cover Inner (F.E.)	1	277
18	'O' Ring for Sleeve	2	156
19	Bearing Lock Nut	1	141
20	Bearing Lock Washer	1	142
21	Gland Packing	2 Set	143
22	Impeller Key	2	180
23	Coupling Key	1	138
24	Bearing at Power End	1	272
25	Bearing at Free End	2	257
26	Water Thrower	2	145
27	'O' Ring for Inter Stage Bush	1	305
28	Water Sealing Pipe	2	118
29	External Cross Over	1	306
30	Air Cock	1	114
31	Dowel Pin for Bearing Bracket	4	245
32	Ball Valve	2	-
33	Thrust Collar	1	125
34	Shaft Guard	2	252

** (P.E.): Power End, (F.E.): Free End

DIMENSIONS OF SINGLE STAGE SPLIT-CASE FIRE PUMPS: SERIES HS & HF

DIMENSIONS OF SINGLE STAGE SPLIT-CASE FIRE PUMPS: SERIES HS & HF

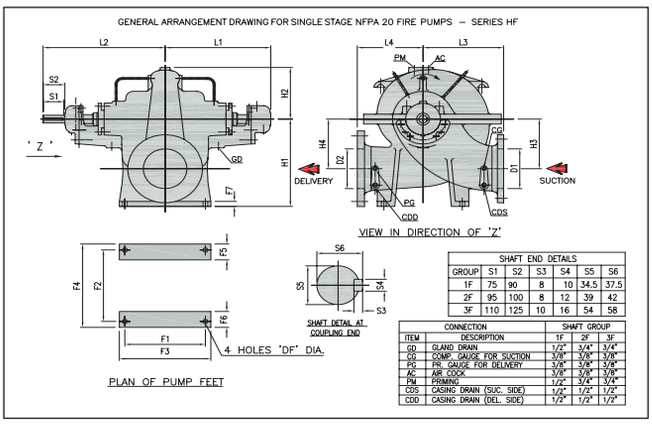

SHAFT END DETAILS						
GROUP	S1	S2	S3	S4	S5	S6
1F	75	90	8	10	34.5	37.5
2F	95	100	8	12	39	42
3F	110	125	10	16	54	58

CONNECTION		SHAFT GROUP		
ITEM	DESCRIPTION	1F	2F	3F
GD	GLAND DRAIN	1/2"	3/4"	3/4"
CG	COMP. GAUGE FOR SUCTION	3/8"	3/8"	3/8"
PG	PR. GAUGE FOR DELIVERY	3/8"	3/8"	3/8"
AC	AIR COCK	3/8"	3/8"	3/8"
PM	PRIMING	1/2"	3/4"	3/4"
CDS	CASING DRAIN (SUC. SIDE)	1/2"	1/2"	1/2"
CDD	CASING DRAIN (DEL. SIDE)	1/2"	1/2"	1/2"

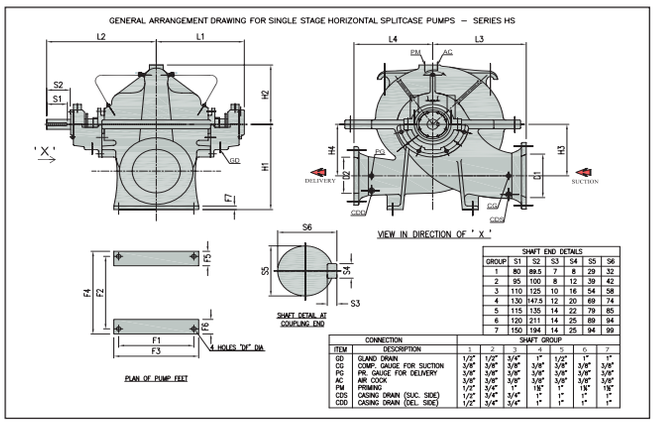

SHAFT END DETAILS						
GROUP	S1	S2	S3	S4	S5	S6
1	80	89.5	7	8	29	32
2	95	100	8	12	39	42
3	110	125	10	16	54	58
4	130	147.5	12	20	69	74
5	115	135	14	22	79	85
6	120	211	14	25	89	94
7	150	194	14	25	94	99

CONNECTION		SHAFT GROUP					
ITEM	DESCRIPTION	1	2	3	4	5	6	7
GD	GLAND DRAIN	1/2"	1/2"	3/4"	1"	1/2"	1"	1"
CG	COMP. GAUGE FOR SUCTION	3/8"	3/8"	3/8"	3/8"	3/8"	3/8"	3/8"
PG	PR. GAUGE FOR DELIVERY	3/8"	3/8"	3/8"	3/8"	3/8"	3/8"	3/8"
AC	AIR COCK	3/8"	3/8"	3/8"	3/8"	3/8"	3/8"	3/8"
PM	PRIMING	1/2"	3/4"	1"	1"	1"	1"	1"
CDS	CASING DRAIN (SUC. SIDE)	1/2"	3/4"	3/4"	1"	1"	1"	1"
CDD	CASING DRAIN (DEL. SIDE)	1/2"	3/4"	3/4"	1"	1"	1"	1"

SERIES HS

PUMPS	SIZE (mm)		SHAFT	OVERALL DIMENSIONS								MOUNTING DIMENSIONS								SHAFT END						APPROX.
MODEL	D1	D2	GROUP	H1	H2	H3	H4	L1	L2	L3	L4	F1	F2	F3	F4	F5	F6	F7	DF	S1	S2	S3	S4	S5 (DIA)	S6	WT. (kg)
5HS17	150	125	2	390	300	270	270	452	552	420	305	330	285	400	350	82.5	82.5	16	18	95	100	8	12	39	42	350
5HS19	150	125	2	415	318	295	295	452	552	420	400	360	360	420	425	82.5	82.5	20	22	95	100	8	12	39	42	390
6HS15	200	150	2	400	279	250	250	452	552	390	320	370	360	420	420	80	80	20	22	95	100	8	12	39	42	409
6HS17	200	150	2	410	315	270	270	452	552	410	360	360	360	420	425	82.5	82.5	20	22	95	100	8	12	39	42	450
6HS21	200	150	3	460	365	320	320	480	605	440	430	400	360	460	425	82.5	82.5	25	26	110	125	10	16	54	58	600
8HS15	250	201.5	3	463.5	336	292	292	480	605	483	381	400	320	470	455	135	135	22	26	110	125	10	16	58	58	600
8HS17	200	200	3	500	345	300	300	480	605	450	400	440	360	500	425	82.5	82.5	30	26	110	125	10	16	54	58	615
8HS21TA	200	200	3	464	370	343	343	525	612	470	457	400	320	475	450	135	135	27	25	110	125	10	16	54	58	699

All Dimensions are in MM

SERIES HF

PUMPS	SIZE (mm)		SHAFT	OVERALL DIMENSIONS								MOUNTING DIMENSIONS								SHAFT END						APPROX.
MODEL	D1	D2	GROUP	H1	H2	H3	H4	L1	L2	L3	L4	F1	F2	F3	F4	F5	F6	F7	DF	S1	S2	S3	S4	S5 (DIA)	S6	WT. (kg)
3HF11	100	80	1F	300	215	190	190	362	425	280	250	210	200	260	270	62.5	62.5	25	20	75	90	8	10	34.5	37.5	200
3HF14	125	80	2F	350	245	225	225	382	482.5	305	265	360	300	420	350	80	80	20	22	95	100	8	12	39	42	345
4HF11	125	100	1F	310	220	195	195	362	425	300	220	250	285	310	350	85	85	20	18	75	90	8	10	34.5	37.5	198
4HF14	150	100	2F	375	255	230	230	485	560	325	250	360	360	425	420	82.5	82.5	20	22	95	100	8	12	39	42	300
4HF16	125	100	2F	350	275	230	230	485	560	415	310	370	360	440	420	80	80	25	22	95	100	8	12	39	42	230
5HF12	150	125	2F	340	250	192	192	452	552	420	335	360	360	425	420	82.5	82.5	25	22	95	100	8	12	39	42	418
6HF12	200	150	2F	375	245	228	228	485	560	370	330	360	370	420	420	80	80	20	22	95	100	8	12	39	42	390
6HF13	200	150	3F	400	275	240	240	525	615	390	325	360	370	420	420	80	80	25	22	110	125	10	16	54	58	464
6HF14	200	150	3F	400	248	225	225	480	605	400	325	360	370	420	420	80	80	25	22	100	125	10	16	54	58	400
8HF12	200	200	2F	440	280	265	265	452	552	400	295	360	370	420	420	80	80	25	22	95	100	8	12	39	42	370
8HF14	250	200	3F	450	290	270	270	480	605	425	325	360	370	420	420	80	80	25	22	110	125	10	16	54	58	623

All Dimensions are in MM

DIMENSIONS OF TWO-STAGE SPLIT-CASE FIRE PUMPS: SERIES HST & HFT

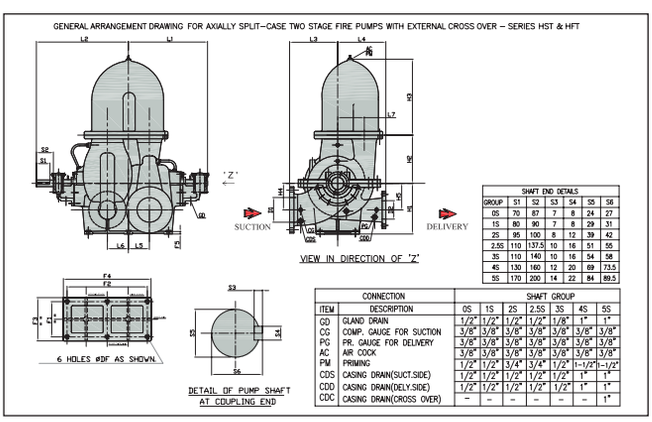

SHAFT END DETAILS						
GROUP	S1	S2	S3	S4	S5	S6
05	70	87	7	8	24	27
15	80	90	7	8	29	31
25	95	100	8	12	39	42
2.5S	110	137.5	10	16	51	55
3S	110	140	10	16	54	58
4S	130	160	12	20	69	73.5
5S	170	200	14	22	84	89.5

CONNECTION		SHAFT GROUP					
ITEM	DESCRIPTION	0S	1S	2S	2.5S	3S	4S	5S
GD	GLAND DRAIN	1/2"	1/2"	1/2"	1/2"	1/8"	1"	1"
CG	COMP. GAUGE FOR SUCTION	3/8"	3/8"	3/8"	3/8"	3/8"	3/8"	3/8"
PG	PR. GAUGE FOR DELIVERY	3/8"	3/8"	3/8"	3/8"	3/8"	3/8"	3/8"
AC	AIR COCK	3/8"	3/8"	3/8"	3/8"	3/8"	3/8"	3/8"
PM	PRIMING	1/2"	1/2"	3/4"	3/4"	1/2"	1-1/2"	1-1/2"
CDS	CASING DRAIN(SUCT.SIDE)	1/2"	1/2"	1/2"	1/2"	1/2"	1"	1"
CDD	CASING DRAIN(DELY.SIDE)	1/2"	1/2"	1/2"	1/2"	1/2"	1"	1"
CDC	CASING DRAIN(CROSS OVER)	–	–	–	–	–	–	1"

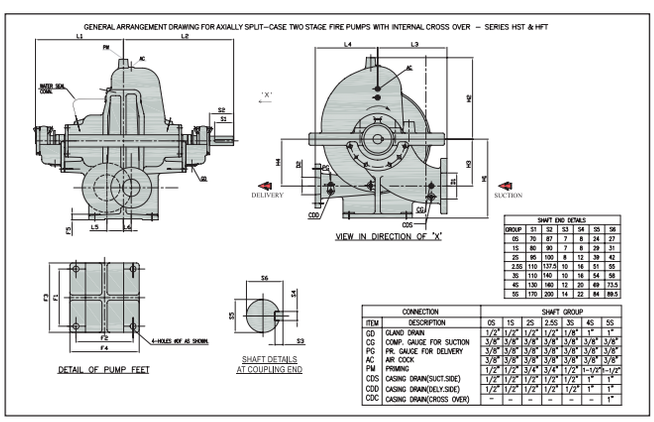

SHAFT END DETAILS						
GROUP	S1	S2	S3	S4	S5	S6
05	70	87	7	8	24	27
15	80	90	7	8	29	31
25	95	100	8	12	39	42
2.5S	110	137.5	10	16	51	55
3S	110	140	10	16	54	58
4S	130	160	12	20	69	73.5
5S	170	200	14	22	84	89.5

CONNECTION		SHAFT GROUP					
ITEM	DESCRIPTION	05	1S	2S	2.5S	3S	4S	5S
GD	GLAND DRAIN	1/2"	1/2"	1/2"	1/2"	1/8"	1"	1"
CG	COMP. GAUGE FOR SUCTION	3/8"	3/8"	3/8"	3/8"	3/8"	3/8"	3/8"
PG	PR. GAUGE FOR DELIVERY	3/8"	3/8"	3/8"	3/8"	3/8"	3/8"	3/8"
AC	AIR COCK	3/8"	3/8"	3/8"	3/8"	3/8"	3/8"	3/8"
PM	PRIMING	1/2"	1/2"	3/4"	3/4"	1/2"	1-1/2"	1-1/2"
CDS	CASING DRAIN(SUCT.SIDE)	1/2"	1/2"	1/2"	1/2"	1/2"	1"	1"
CDD	CASING DRAIN(DELY.SIDE)	1/2"	1/2"	1/2"	1/2"	1/2"	1"	1"
CDC	CASING DRAIN(CROSS OVER)	–	–	–	–	–	–	1"

SERIES HST

PUMPS	SIZE (mm)		SHAFT	OVERALL DIMENSIONS										MOUNTING DIMENSIONS							SHAFT END						APPROX.
MODEL	D1	D2	GROUP	H1	H2	H3	H4	H5	L1	L2	L3	L4	L5	L6	L7	F1	F2	F3	F4	F5	DF	S1	S2	S3	S4	S5 (DIA)	S6	WT. (kg)
4HST16	150	100	2.5S	400	450	260	260	-	488.5	572	400	360	98	43	-	330	330	400	400	25	34	95	100	8	12	39	42	611
4HST19	150	100	3S	455	470	270	270	-	508	636	400	360	95	45	-	330	330	400	400	32	34	110	140	10	16	54	58	725
5HST15	150	125	2.5S	335	390	200	200	-	432	532	350	325	78	41	-	290	290	340	340	24	34	95	100	8	12	39	42	550
6HST18	200	150	3S	455	430	280	280	-	490	615	510	370	41	41	-	330	330	400	400	26	34	110	140	10	16	54	58	641
6HST19	200	150	4S	220	480	395	280	280	678	777	450	410	155.5	54.5	280	870	430	990	520	24	22	130	160	12	20	69	73.5	1163
6HST24	200	150	4S	215	475	405	345	345	684	850	510	445	152	52	272	880	430	990	520	30	28	130	160	12	20	69	73.5	1670

All Dimensions are in MM

SERIES HFT

PUMPS	SIZE (mm)		SHAFT	OVERALL DIMENSIONS										MOUNTING DIMENSIONS							SHAFT END						APPROX.
MODEL	D1	D2	GROUP	H1	H2	H3	H4	H5	L1	L2	L3	L4	L5	L6	L7	F1	F2	F3	F4	F5	DF	S1	S2	S3	S4	S5 (DIA)	S6	WT. (kg)
2.5HFT12	80	65	0S	285	315	160	160	160	347	419	260	230	60	22.5	140	200	150	300	250	20	16	70	87	7	8	24	27	190
3HFT11	100	80	1S	290	315	180	180	180	350	469	270	250	40.25	40.25	150	250	250	300	300	20	24	80	90	7	8	29	31	312
3HFTD14	125	80	2.5S	355	705	210	210	210	581	672	325	250	125	125	210	360	540	420	600	24	24	110	137.5	10	16	51	55	320
4HFT14	150	100	3S	400	440	230	230	230	552	642	370	360	52.0	52	245	330	330	400	400	25	34	110	137.5	10	16	54	58	593
6HFTD12	200	150	3S	375	325	370	190	190	596.5	705	325	325	150	150	190	285	620	350	670	24	24	110	137.5	10	16	54	58	684
6HFTD13	200	150	3S	410	390	610.5	215	215	640.5	745	390	390	170	170	215	285	650	350	710	20	24	110	137.5	10	16	54	58	940

All Dimensions are in MM

PUMPSENSE FIRE PUMPS: DATA SHEET

TECHNICAL DATA - SERIES HS & HST

		TECHNICAL DATA - SERIES HS								TECHNICAL DATA - SERIES HST					
A.PUMPS FRAME	**Unit**	**5HS17**	**5HS19**	**6HS15**	**6HS17**	**6HS21**	**8HS15**	**8HS17**	**8HS21TA**	**4HST16**	**4HST19**	**5HST15**	**6HST18**	**6HST19**	**6HST24**
1. Discharge size	mm	125	125	150	150	150	200	200	200	100	100	125	150	150	150
2. Suction size	mm	150	150	200	200	200	250	200	200	150	150	150	200	200	200
3. Flange rating		B16.5 as standard. ANSI#125(Suction) &ANSI#250(Delivery) Other grades depending on application.													
4. Casing Material		BS 1452 Gr. FG 260 as standard. Other grades depending on application.													
5. Casing Thickness	mm	12	20	15	14	15	16	16	18	22	25	20	14	20	22
6. No. of stages		1	1	1	1	1	1	1	1	2	2	2	2	2	2
7. Split Flange Gasket	mm	0.4	0.4	0.4	0.4	0.4	0.4	0.4	0.4	0.4	0.4	0.4	0.4	0.4	0.4
B. IMPELLER AND ROTOR															
1. Maxm Impeller Diameter	mm	440	490	372	438	530	375	440	537	415	470	360	460	484	600
2. Weight of Impeller	Kg	38	58	20.18	32	53	32.55	49	50.6	18	21	24	27.5	50.95	75.5
3. Weight of rotating Element	Kg	20	20	20	20	35	35	35	35	46.5	66	48.5	77	128.5	134
4. Wear Ring clearence dia (max.)	mm	0.34	0.38	0.38	0.38	0.38	0.38	0.38	0.38	0.33	0.33	0.33	0.34	0.34	0.36
Wear Ring clearence dia.(min.)	mm	0.28	0.31	0.31	0.31	0.31	0.31	0.31	0.31	0.30	0.30	0.30	0.31	0.31	0.32
5. ID of Casing Wear Ring	mm	175	170	189	198	212	225	230	215	185	200	210	215	250	270
6. Impeller Eye Diameter	mm	151	140	168	170	183	200	196	186	162	166	185	190	221	230
7. Impeller Eye Area/ per Eye	Sq. cm	140.5	115.5	183.0	189	201	254.5	239.5	209.5	166	153	168	225	297	328.0
8. GD ^2 for Maximum Diameter	$Kg.m^2$	1.9	2.36	2.36	1.88	6	4.1	4.1	4.1	3	3.2	2.8	6.8	7.8	10.8
C. SHAFT AND BEARINGS															
SHAFT GROUP		**2**	**2**	**2**	**2**	**3**	**3**	**3**	**3**	**2.5S**	**3S**	**2.5S**	**3S**	**4S**	**4S**
1. Shaft diameter at Impeller	mm	51	51	51	51	64	64	64	64	51	64	40	64	81	81
2. Shaft diameter at Coupling	mm	39	39	39	39	54	54	54	54	39	54	39	54	70	69
3. Bearing Centres	mm	660	820	820	820	870	870	870	870	860	920	860	890	1170	1190
4. 1st Critical Speed	RPM	4320	4320	4820	4820	5230	5725	5725	4630	4941	6531	4361	6208	4759	3909
5. Bearing size drive end		6308	6308	6308	6308	6311	6311	6311	6311	6308	6311	6306	6311	314	315
6. Bearing size non-drive end		6308	6308	6308	6308	6311	6311	6311	6311	3308	6311	6306	6311	7314	6315
D. STUFFING BOX															
1. Inside Diameter	mm	89	89	89	89	105	105	105	105	85	88	73	105	127	105
2. Depth of Box	mm	80	80	80	80	112	112	112	112	75	112	72	112	20	112
3. Size of Packing	Sq. mm	12	12	12	12	16	16	16	16	10	16	16	16	16	16
4. No. of rings per Box		5	5	5	5	5	5	5	5	5	5	5	5	5	5
5. Sleeve Diameter at Box	mm	65	65	65	65	73	73	73	73	65	75	65	75	95	95
6. Mech. Seal Size (AES/Flowserve)	mm	45	45	45	45	60	60	60	60	45	60	45	60	60	80
E. SERVICE LIMITS															
1. Max. working pressure	Bar	16	16	16	16	16	16	16	20	16	20	20	20	20	30
2. Max. Hydrotest pressure	Bar	24	24	24	24	24	24	24	30	24	30	30	30	30	45
3. Max. Suction pressure	Bar	5	5	5	5	5	5	5	5	5	5	5	5	5	5
4. Max. Temp packing	ºCelcius	80	80	80	80	80	80	80	80	80	80	80	80	80	80
5. Max. Temp Mech seal	ºCelcius	120	120	120	120	120	120	120	120	120	120	120	120	120	120
6. Max. Speed	RPM	1800	1800	1800	1800	1800	1800	1800	1800	1800	1800	1800	1800	1800	1800

TECHNICAL DATA - SERIES HF & HFT

		TECHNICAL DATA - SERIES HF											TECHNICAL DATA - SERIES HFT					
A.PUMPS FRAME	**Unit**	**3HF11**	**3HF14**	**4HF11**	**4HF14**	**4HF16**	**5HF12**	**6HF12**	**6HF13**	**6HF14**	**8HF12**	**8HF14**	**2.5HFT12**	**3HFT11**	**3HFTD14**	**4HFT14**	**6HFTD12**	**6HFTD13**
1. Discharge size	mm	80	80	100	100	100	125	150	150	150	200	200	65	80	80	100	150	150
2. Suction size	mm	100	125	125	150	125	150	200	200	200	200	250	80	100	125	150	200	200
3. Flange rating		B16.5 as standard. ANSI#125(Suction) &ANSI#250(Delivery) Other grades depending on application.																
4. Casing Material		BS 1452 Gr. FG 260 as standard. Other grades depending on application.																
5. Casing Thickness	mm	10	14	12	15	16	20	14	18	16	18	23	10	14	22	20	14	25
6. No. of stages		1	1	1	1	1	1	1	1	1	1	1	20	2	2	2	2	2
7. Split Flange Gasket	mm	0.4	0.4	0.4	0.4	0.4	0.4	0.4	0.4	0.4	0.4	0.4	0.4	0.4	0.4	0.4	0.4	0.4
B. IMPELLER AND ROTOR																		
1. Maxm Impeller Diameter	mm	280	355	275	340	395	308	305	330	340	305	340	305	306	350	352	300	334
2. Weight of Impeller	Kg	17	13.3	13.9	18.8	30.1	18.1	24	25	27.5	23.5	24.5	20	21	20	16	21	24
3. Weight of rotating Element	Kg	31	58.3	31.1	58.3	58.3	59.2	58.3	81	83	58.3	95	10	12	76	99	117	115
4. Wear Ring clearence dia (max.)	mm	0.23	0.42	0.29	0.30	0.34	0.28	0.36	0.35	0.33	0.36	0.35	0.24	0.27	0.32	0.32	0.32	0.32
Wear Ring clearence dia.(min.)	mm	0.21	0.40	0.28	0.28	0.33	0.25	0.28	0.33	0.31	0.28	0.34	0.21	0.25	0.30	0.30	0.30	0.30
5. ID of Casing Wear Ring	mm	115	148	148	155	155	154	195	185	190	200	200	105	150	150	200	167	190
6. Impeller Eye Diameter	mm	93	120	118	132	130	130	160	137.4	164	169	170	88	134	120	167	147	158
7. Impeller Eye Area per Eye	Sq. cm	47.6	74.5	83	98	94	94.2	164.7	275.0	149.0	187.9	164.6	25.0	46.6	58	155	125	163.8
8. GD ^2 for Maximum Diameter	$Kg.m^2$	0.48	0.71	0.49	0.68	1.31	0.82	1.23	1.35	1.22	1.52	1.38	0.51	0.43	1.05	1.08	1.72	2.22
C. SHAFT AND BEARINGS																		
SHAFT GROUP	**Unit**	**1F**	**2F**	**1F**	**2F**	**2F**	**2F**	**2F**	**3F**	**3F**	**2F**	**3F**	**1.5F**	**1F**	**3F**	**3F**	**3F**	**3F**
1. Shaft diameter at Impeller	mm	40	51	40	51	51	51	51	64	64	51	64	30	44	64	64	64	64
2. Shaft diameter at Coupling	mm	34.5	39	34.5	39	39	39	39	54	54	39	54	24	34.5	51	54	54	54
3. Bearing Centres	mm	540	679.9	588.5	831.5	831.5	820	820	870	870	820	870	600	692	984	938.5	1064.5	1145
4. 1st Critical Speed	RPM	7034	6752	5974	5140	4101	5374	4502	6567	6420	4909	6149	5011	4248	5945	6307	6482	5521
5. Bearing size drive end		6307	6308	6307	6308	6308	6308	6308	6311	6311	6308	6311	6305	6307	6311	6308	6311	6311
6. Bearing size non-drive end		7306	6308	7306	7308	7308	6308	7308	7311	6311	6308	6311	6305	6307	6311	7308	3311	7311
D. STUFFING BOX																		
1. Inside Diameter	mm	73	89	73	89	89	89	89	110	110	89	110	62	72	100	100	89	89
2. Depth of Box	mm	73	88	73	88	88	88	88	117	117	88	117	67	75	112	112	88	88
3. Size of Packing	Sq. mm	10	12	10	12	12	12	12	16	16	12	16	10	10	16	16	12	12
4. No. of rings per Box		5	5	5	5	5	5	5	5	5	5	5	5	5	5	5	5	5
5. Sleeve Diameter at Box	mm	53	65	53	65	65	65	65	78	78	65	78	42	52	72	72	65	65
6. Mech. Seal Size (AES/Flowserve)	mm	40	45	40	45	45	45	45	60	60	45	60	45	45	45	45	60	60
E. SERVICE LIMITS																		
1. Max. working pressure	Bar	16	16	16	16	16	16	16	20	24	20	20	16	16	16	16	16	16
2. Max. Hydrotest pressure	Bar	24	24	24	24	24	24	24	30	36	30	30	24	24	24	24	24	24
3. Max. Suction pressure	Bar	5	5	5	5	5	5	5	5	5	5	5	5	5	5	5	5	5
4. Max. Temp packing	ºCelcius	80	80	80	80	80	80	80	80	80	80	80	80	80	80	80	80	80
5. Max. Temp Mech seal	ºCelcius	120	120	120	120	120	120	120	120	120	120	120	120	120	120	120	120	120
6. Max. Speed	RPM	1800	1800	1800	1800	1800	1800	1800	1800	1800	1800	1800	1800	1800	1800	1800	1800	1800

QUALITY ASSURANCE & TESTING

For each order executed by Pumpsense, detailed quality plan is drawn up to reflect special conditions of the order and customers specific QA requirements. As a minimum, the following QA documents are available for each pumps manufactured by Pumpsense and the customer may access these documents at any time:

Pump has been tested with the help of booster pump to get the positive suction pressure at rated speed

- Seal integrity test report
- Performance test report
- Dynamic balancing report for the rotating element
- Hydrostatic pressure (Rupture test wherever applicable) test report
- Dimensional conformance report & As Built General Arrangement drawing
- Physical and chemical test certificates for major pumps components such as casing, impeller and shaft.

IN-HOUSE NON-DESTRUCTIVE TEST FACILITIES

- Dynamic balancing machine
- Liquid penetrant test arrangement
- Ultrasonic test equipment

HYDROSTATIC PRESSURE TEST & SEAL INTEGRITY TEST

- All pumps casings are pressure tested as per applicable code/customer's order.
- Fully assembled mechanical seal fitted pumps are subjected to a second hydrostatic test at the maximum allowable seal pressure or casing hydrostatic test pressure, whichever is lower, to check leak free operation of seals under pressure.

PERFORMANCE TEST

All pumps are tested for performance as per ISO 9906 Grade 1. Pumpsense is equipped with a state of the art test bed with the following key features:

- **Test Tank -** The tank which is partly underground and partly over ground ensures adequate NPSHA for performance test. The tank size is 23ft(L) X 10ft(W) X 12ft(W) and holds 80 m^3 of potable water for testing. The test tank has been specially designed as per the guidelines of the Hydraulic Institute Standards and is provided with necessary flow stabilizers, separate return chambers, etc. in order to ensure vortex free suction condition.
- **Test Lines -** There are two test lines of 300 mm and 150 mm capable of measuring flows up to 2000 m^3/hr.
- **Flow Measurement -** Flow measurement is done primarily by magnetic flow meters. However, the test lines are also equipped with orifice meters supported by differential pressure transducers for flow measurements/calibration. Ultrasonic flow meter provides a third means of flow measurement in the test bed.
- **Pressure Measurement -** This is done by both pressure transducers and bourdon type pressure gauge.
- **Power Measurement -** Power is measured by YOKOGAWA power meter. For non-synchronous motor speeds the power is also measured by S. HIMMELSTEIN make torque meter.
- **Speed -** Pumps speed is measured by stroboscope.
- **Vibration -** Vibration data is obtained by a Bruel & Kjaer vibration analyzer.
- **Speed Variation -** Speed variation for testing is achieved through a 280kW/132kW VFD supplied by Fuji.
- **Flow control -** Flow control is achieved by actuator operating globe and butterfly valves.
- **Data acquisition and control panel -** A specially designed control panel with the state-of-the-art instrumentation is used for data acquisition and test sheet/test curve generation. The system uses proprietary software for pumps testing.
- **NPSH test -** NPSH test is conducted by a 3% head-decay method by throttling the suction globe valves.

NFPA-20 FIRE PUMPS FOR FPSO AND FSO

Pumpsense offers customised fire pumps solutions for FPSO & FSO units. These specialised fire pumps play a crucial role in ensuring the safety of FPSO/FSO installations. We supply atleast three different configurations for FPSO fire duties:

1) **Electric motor driven Fire pumps -** These pumps are generally double suction vertical shaft axially split case pumps.
2) **Direct diesel engine driven fire pumps -** These pumps are used where they can be installed below the draught line . Pumps are axially split-case with side-suction & top delivery configuration for ease of installation.
3) **Diesel and Hydraulic driven Fire-pumps -** In this system a hydraulic motor driven lift pumps takes suction from the sea chest and supplies to the main engine driven fire pumps.

PUMPS TYPES FOR FPSO/FSO FIRE DUTIES : HS / VHS / SF / SFM

Materials of Construction –

1) Bronze 2) Nickel Al. Bronze 3) Ductile Ni Resist

Capacity Range – 300, 600, 1200, 2400 m^3/hr.

Head range – 120 – 160 m

Speed – 1800 rpm – 2100 rpm for main fire pumps
900 rpm – 1500rpm for lift pumps

Selection Table for NFPA-20 Split Case Fire Pumps - 3000 GPM to 5000 GPM

DUTY DETAILS					PUMPS MODEL	DRIVER RATING	
Flow		Head		SPEED			
USGPM	M^3/HR.	PSIG	M	RPM		Kw	HP
3000	682	30-44	21-31	1500	10HS13	160	214
		47-71	33-50		10HS15	180	241
		64-92	45-65		10HS17	225	302
		106-163	75-115		10HS22	450	603
		185-298	130-210		10HSTD22	675	905
		85-199	60-140	1800	8HS22	475	637
		199-312	140-220		8HS26	650	871
		284-440	200-310		10HSTD22	1050	1407
		114-185	80-130	2100	8HS17	375	503
		199-298	140-210		8HS22	700	938
		90-152	63-107	3000	8HF12	350	469
3500	795	47-68	33-48	1500	10HS15	180	241
		62-89	44-63		10HS17	250	335
		71-99	50-70		12HS18	275	369
		102-165	72-116		10HS22	475	637
		142-227	100-160		10HS27	600	804
		170-290	120-204		10HSTD22	725	972
		64-104	45-73	1800	10HS15	300	402
		104-163	73-115		10HS18	450	603
		163-241	115-170		10HS22	800	1072
		284-426	200-300		10HSTD22	1150	1541
		48-85	34-60	2100	10HS13L	225	302
		186-297	131-209		8HS22	775	1039
4000	909	61-89	43-63	1500	10HS17	275	369
		68-96	48-68		12HS18	275	369
		100-163	70-115		10HS22	500	670
		163-220	115-155		10HS27	675	905
		68-101	48-71	1800	10HS15	300	402
		96-136	68-96		10HS17	450	603
		105-146	74-103		12HS18	450	603
		213-338	150-238		10HS27	1100	1474
		270-426	190-300		10HSTD22	1250	1675
4500	1022	35-49	50-70	1500	12HS18	300	402
		53-70	75-100		12HS22	450	603
		63-105	90-150		12HS26	800	1072
		35-49	50-70	1800	12HS15	325	436
		49-70	70-100		12HS18	475	637
		81-105	115-150		12HS22	850	1139
		105-176	150-250		10HS27	1100	1474
5000	1136	42-68	30-48	1500	12HS16	225	302
		64-92	45-65		12HS18	315	422
		99-147	70-104		12HS22	550	737
		113-184	80-130		14HS24	700	938
		118-213	83-150		12HS26	800	1072
		39-59	28-42	1800	12HS13	225	302
		66-93	47-66		12HS15	350	469
		71-99	50-70		12HS16	400	536
		99-137	70-97		12HS18	500	670
		156-225	110-160		12HS22	875	1173

*** Please contact with PSF for rated capacity more than anything mentioned above

FIRE PUMPS SKIDS & COMPLETE FIRE PUMPS PACKAGES

Pumpsense fire pump packages are designed and built complying to NFPA-20 standards. Wherever required, we incorporate customers specifications, including hazardous and non-hazardous area specifications. The pumps can be provided in various materials of construction: Ductile Ni-Resist, Nickel Al. Bronze, AISI 316 Stainless Steel and/ or Duplex Stainless Steel.

FIRE PUMPS UNITS & PACKAGED SYSTEMS

Electric motor driven and Diesel engine driven fire pumps can be furnished for any combination of pumps, drives, controls and accessories for listed, approved and non-listed fire service applications.

Packaged units and systems lower fire pumps installation costs and offer many advantages:

- Pumps, driver and controller are mounted on a common base.
- Common baseplate unit eliminates the need for separate mounting surfaces.
- Common unit minimizes the need for interconnecting wiring and assembly.
- Equipment arrives in a consolidated shipment, allowing faster and simplified installation and handling.
- Custom designed system, including accessories, fittings, and layouts available to meet the customer's specifications.
- In-house engineering and design expertise to ensure design requirements are realized.

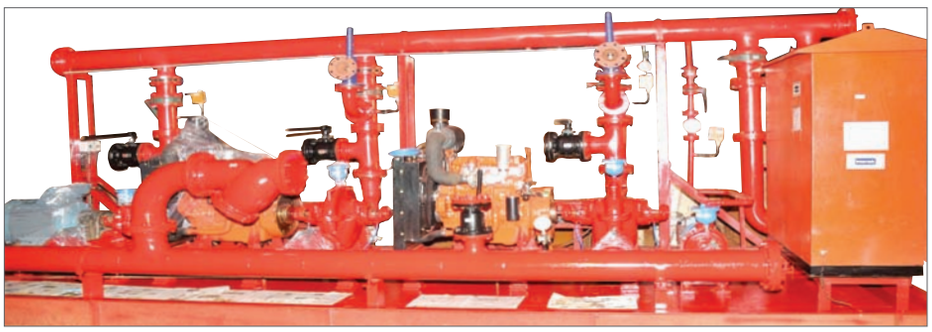

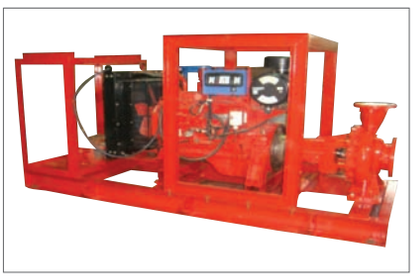

A STANDARD LIST OF COMPONENTS OF PUMPSENSE FIRE PUMP SKID/ PACKAGES

- Listed/Approved or Non-listed Fire Pumps/Jockey Pumps
- Listed/Approved or Non-listed Fire Pumps/Jockey Pumps Controller
- Pressure Sensing Lines Complete as per NFPA 20
- Suction and Discharge Pressure Gauges
- Automatic Casing Air Release Valve
- Casing Pressure Relief Valve (Electric Packages)
- Hose Header with Valves, Caps & Chains
- Suction and Discharge Piping as per NFPA 20
- Removable Lifting Lugs

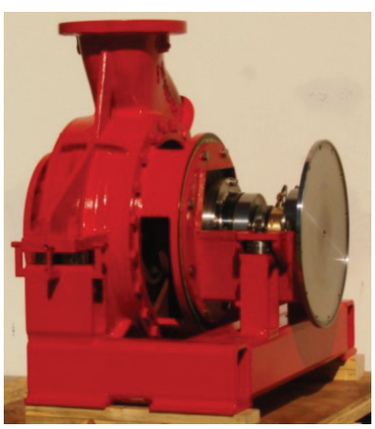

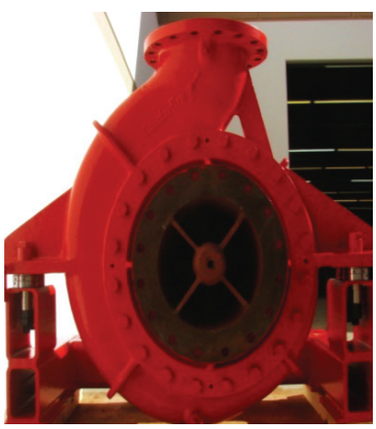

Our ESFX range of marine fire-fighting pumps (FIFILITE range) offers following advantages:

Sl.	Features	Advantages
1	Very small foot print	Ideal for engine room installations
2	Light weight	This has a very positive impact on vessel speed
3	Optimized hydraulics	Smallest possible impeller diameter for the head range. This reduces the pump size
4	Large shaft diameter	To reduce shaft deflection and to enhance mechanical reliability
5	High capacity bearings	Double row angular contact thrust bearings and "Thordon" front-end bush bearing for long bearing life
6	Material options	Available in DI, Bronze, NAB & duplex materials
7	Direction of rotation	Pumps are available with CW & CCW rotation
8	Certifications	Pumps can be supplied with third party certificates such as those from ABS/Lloyds etc.

OTHER PRODUCTS FROM PUMPSENSE

Bottom suction side discharge split case pumps for water supply. Pumps Size: 500X400-540. All our pumps can be supplied with customized branch orientation.

Sewage pumps having capacities up to 4000 m^3/hr. are available with horizontal / vertical / cardan shaft mounting. All pumps are non-clog design with two/three vane impellers.

Pumpsense all bronze pumps for sea water application are very popular. This series of pumps can be offered as clutch mounted product, and are often supplied as kits for assembly by the gear box makers.

In vertical IL pumps, suction and discharge connections are in-line and are of the same size to simplify piping. The pumps is provided with its own thrust bearing and is flexibly coupled to the motor shaft.

Split-case marine external fire (FiFi) pumps are available in various branch orientations and MOCs. They are supplied with certifications by ABS, Lloyds, CCS and other marine surveyors.

ES series small end suction pumps conforms to ISO 2858 as well as ISO 5199. Over 37 frames ensures optimum selection for all duties Quick Customization possible to ensure optimum operation.

Two stage pumps with integral cross-over passages provide high efficiency and stable head-capacity characteristics. Axial & radial thrust loads are fully balanced for this class of pumps.

Test Bed at Pumpsense is fully compliant with the requirements of ISO 9906 / HI 14.6. Test set up is completely automated for data acquisition.

Large end suction pumps cover sizes between 150 and 400mm for flows up to 3200 m3/hr and heads up to 200 mtrs. These pumps are available for air conditioning, industrial cooling water supply, and marine fire services.

High head two stage split-case pumps with external cross-over passages are used to ensure optimum performance. Two single or double entry impellers are placed back to back to eliminate axial thrust.

Single stage standard split-case range of pumps for capacity up to 3000 m3/hr and heads up to 200 m with many customised options are available. Pumps can be supplied in wide variety of material to suit the application and liquid to be pumped.

CSC series pumps are required for long uninterrupted service with minimum of maintenance. Where, the energy costs constitute a significant portion of the life-cycle cost of an industrial plant like Industrial & Urban Water Supply, Air-conditioning, Process Industry.

We upgrade our product continuously. The information contained in this brochure should be used for general guidelines only since they are subject to change without notice.

PUMPSENSE FLUID ENGINEERING PVT. LTD

5/F, Hastings Court, Tower A , 96, Garden Reach Road, Kolkata – 700023, INDIA

Tel: +91-33- 24591861/1862 Fax: +91-33-24591862

Web: worldofpumps.com email: enquiries@worldofpumps.com