Rooted in experience

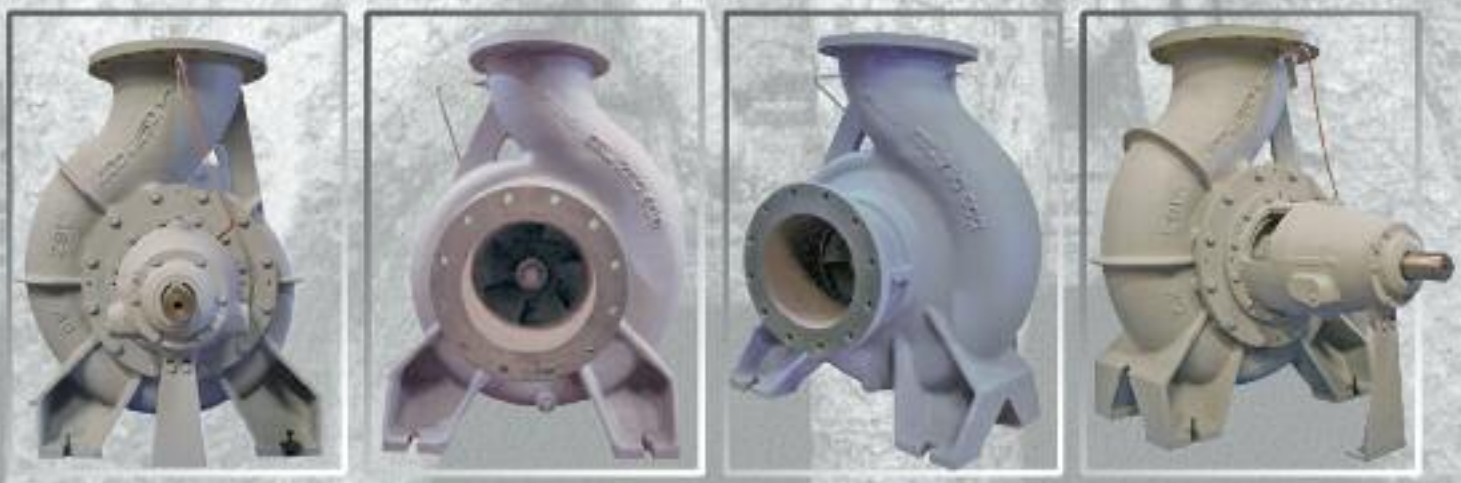

END SUCTION PUMPS
SERIES - ESL

PUMPSENSE
Fluid Engineering Pvt. Ltd

Product Application

ESL End suction pumps are used in the following fields:

- General Industrial Services
- Water Supply / Water Treatment
- Power Generation
- Fire Protection
- Metal Manufacturing
- Mine Dewatering
- Irrigation
- Desalination

Product Highlights

- **Range Coverage** – A total of 31 pumps provide optimum coverage of duties for flows beyond ISO2858 end suction pumps.
- **Hydraulic Design** – Extensive use has been made of proven hydraulics from our established split case pumps to build this range. The hydraulic performance is characterized by stable head-capacity curve, high efficiency and low NPSHr.
- **Mechanical Design** – All high head pumps incorporate double volute design to reduce radial load and to improve seal/bearing lives. Combination of cylindrical roller and BECB matched pair angular contact bearings ensures high bearing life under all load conditions.

Construction Options

- Clockwise rotation is standard while CCW rotation can be provided on request.
- Customized suction branch orientation
- Centerline Mounting
- Oil Lubricated Bearings
- Varieties of mechanical seal options
- Many Material Options
- Short Bearing bracket with product lubricated bush bearing ahead of the impeller.

Quality Assurances

Standard QA documents include:

- Material compliance certificate
- Hydrostatic pressure test report
- Performance test report

RANGE CHARTS (ESL, 50Hz, 1500 RPM; ESL, 60Hz, 1800 RPM)

ESL SERIES

ESL END SUCTION PUMPS

RANGE CHART AT 50Hz 4POLE SPEED (1500 RPM)

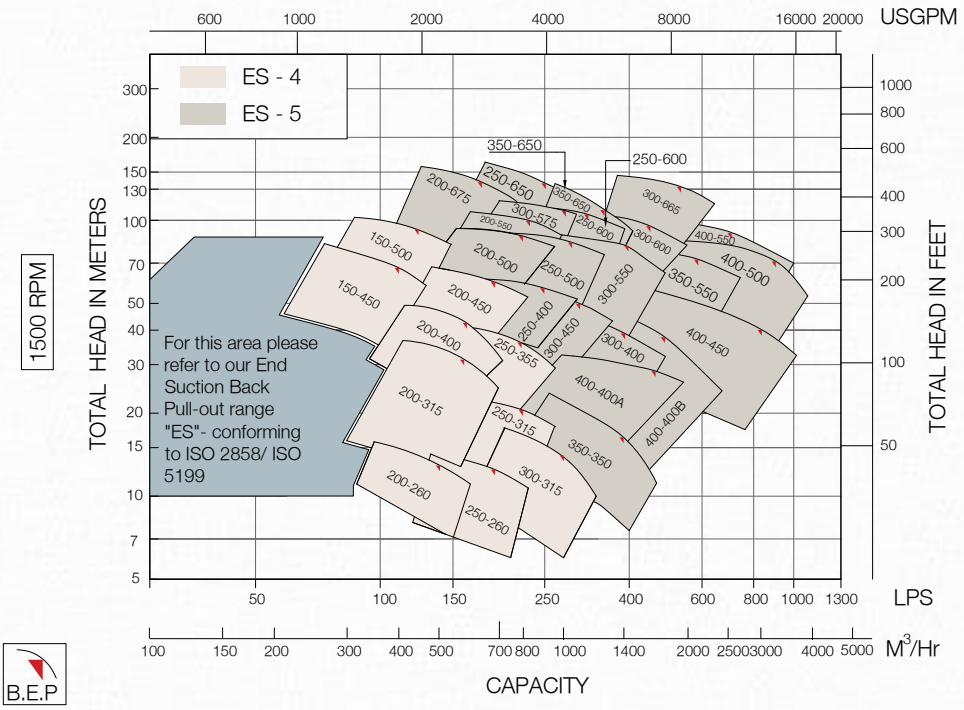

ESL SERIES

ESL END SUCTION PUMPS

RANGE CHART AT 60Hz 4POLE SPEED (1800 RPM)

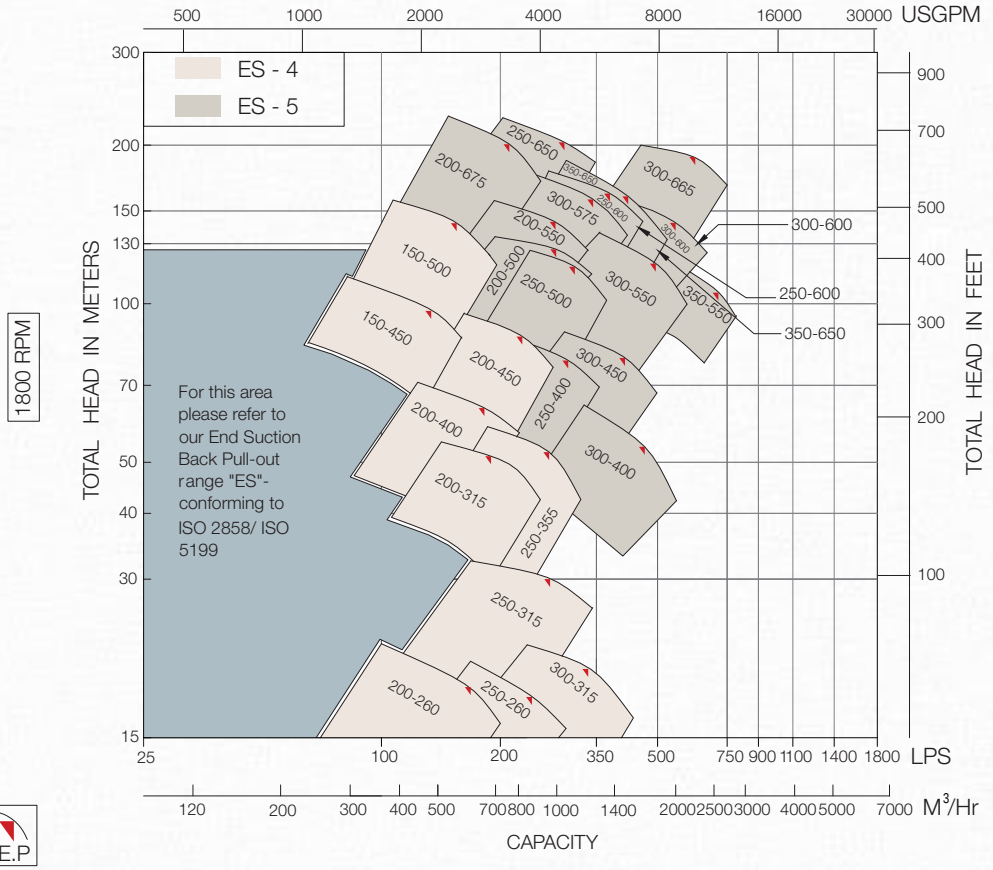

RANGE CHARTS (ESL, 50Hz, 1000 RPM; ESL, 60Hz 1200 RPM)

ESL END SUCTION PUMPS

ESL SERIES

RANGE CHART AT 50Hz 6POLE SPEED(1000 RPM)

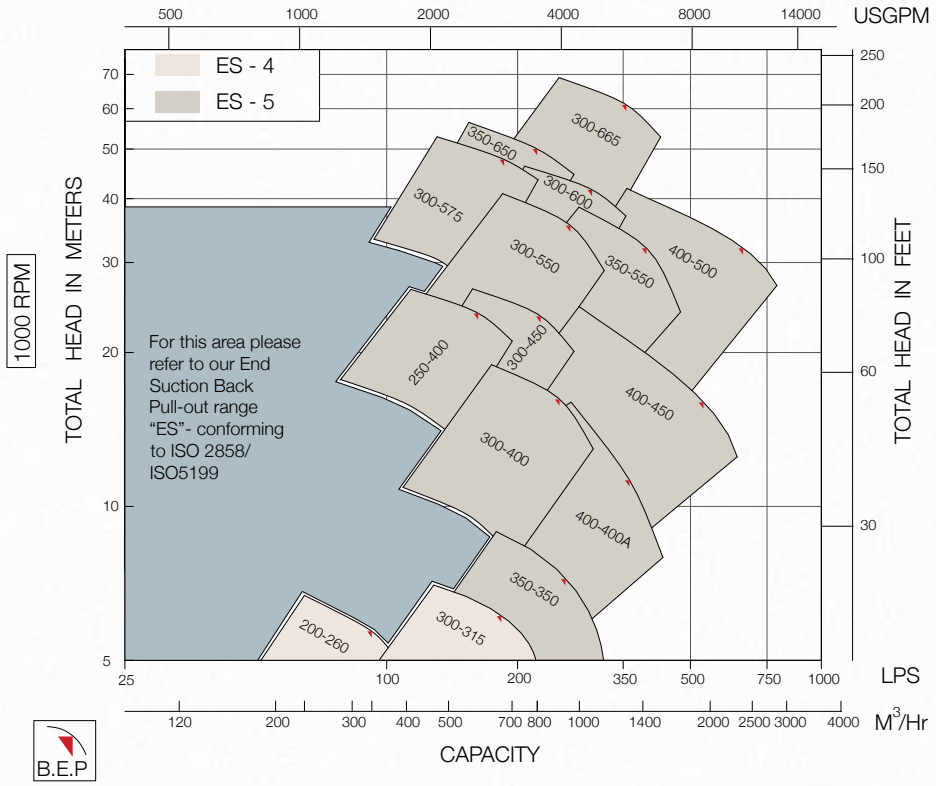

ESL END SUCTION PUMPS

ESL SERIES

RANGE CHART AT 60Hz 6POLE SPEED (1200 RPM)

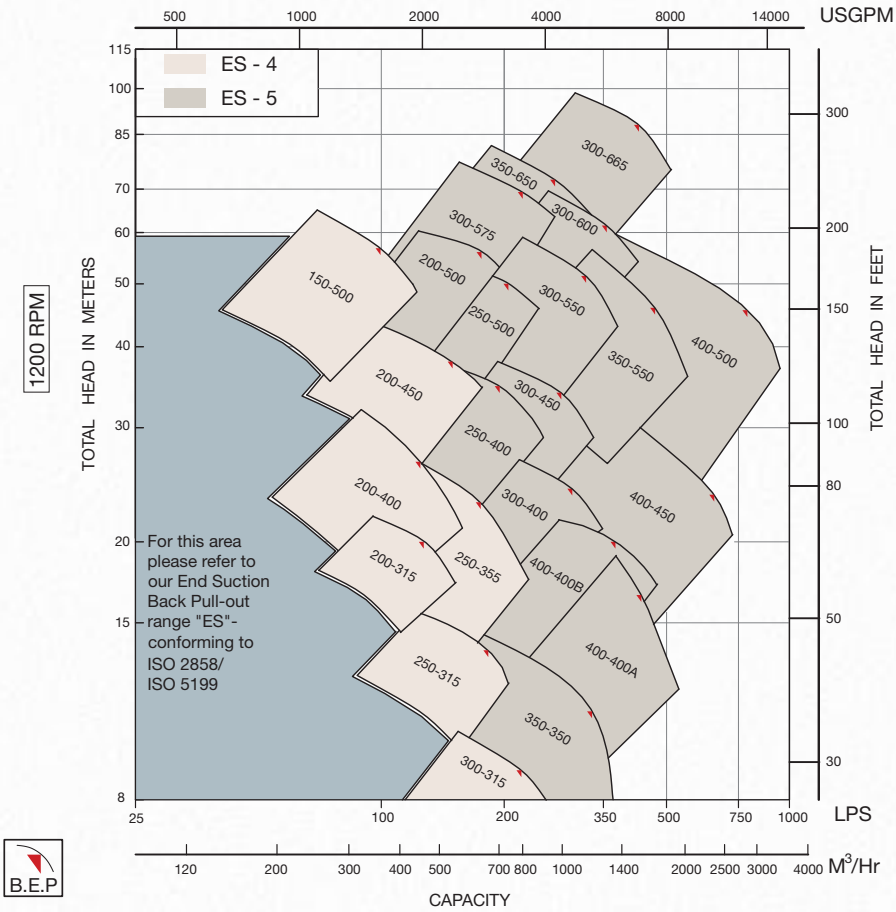

MAJOR FEATURES OF PUMP CONSTRUCTION

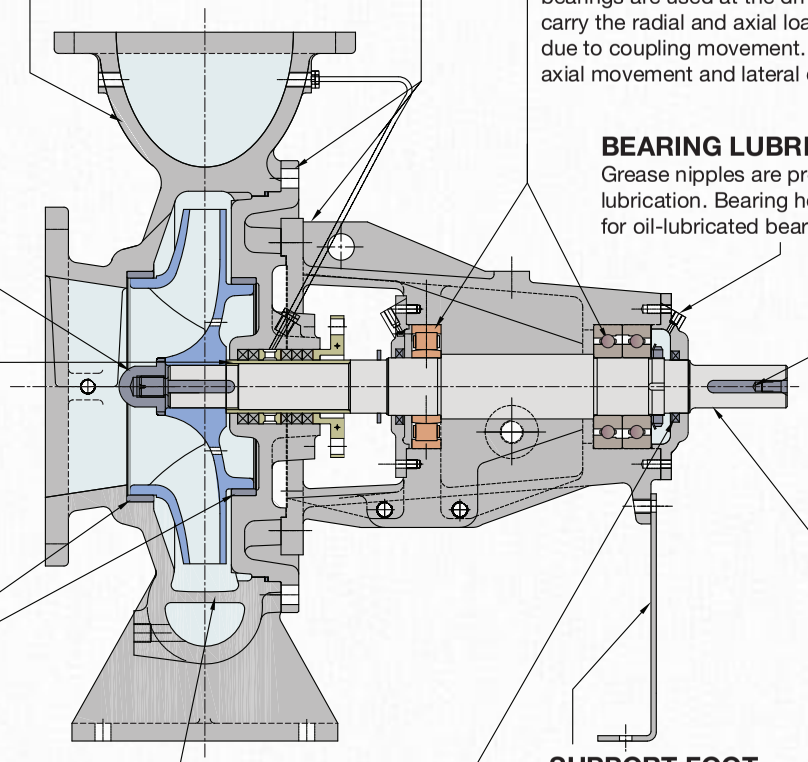

CASING THICKNESS
Long working life of pump casing is ensured by strength analysis and high integrity castings. Liberal corrosion allowance is also provided.

BACK PULL-OUT DESIGN
This feature allows easy removal of the rotating element without disturbing the pipe work, electric motor or pump volute casing and thus reduces downtime when performing routine maintenance.

IMPELLER NUT
Positively locks impeller to the shaft. Prevents "back off" during accidental reverse motor rotation.

BEARING
Heavy duty angular contact (BECB series) and cylindrical roller (NU series) bearings are used at the drive end and the non-drive ends respectively, to carry the radial and axial loads imposed on the impeller and also the load due to coupling movement. Bearing system is designed to keep the shaft axial movement and lateral deflection within acceptable limits.

BEARING LUBRICATION
Grease nipples are provided for bearing lubrication. Bearing housings are suitable for oil-lubricated bearings as well.

KEY AND KEYWAY
The key in the shaft is liberally designed to transmit power from driver (motor / engine) to the pump with the help of a flexible coupling coupled to the driver shaft.

Shaft Sleeve
The pump shaft is fitted with a renewable shaft sleeve to minimize shaft wear. The sleeve is sealed at the impeller to prevent ingress of pumped liquid on the shaft. An additional function of the shaft sleeve is to increase the stiffness of the rotating assembly, thereby reducing shaft deflection at the stuffing box. This has beneficial effects on seal and bearing lives.

CASE WEARING RING
The pump casing and back covers are fitted with replaceable wear ring to minimize abrasive and corrosive wear to the casing while minimizing leakage losses. Addition-ally, Impeller rings are provided as optional extras for demanding applications. Galling properties are taken into consideration while selecting the wear ring materials and their clearances at the rotating elements.

DOUBLE VOLUTE CASING
All high head pumps are provided with double volute casing to minimize radial load. This feature allows wider operating range and extended bearing and seal lives.

OIL SEAL
Oil seals are used to prevent contamination of lubricant in bearing area.

SUPPORT FOOT
This sturdy unit minimizes shaft displacement in the coupling area.

SHAFT
The shafts are sturdy and designed with high stiffness (low L^3/D^4 ratio). The design ensures deflection of less than 0.05 mm at the seal areas under normal running conditions. Shaft is dimensioned to ensure bearing life of more than 40,000 operating hours when run in the preferred operating region. All shafts are protected by replaceable sleeves in stainless steel or copper alloys.

CROSS-SECTION OF ESL END SUCTION PUMP (PACKED GLAND FITTED)

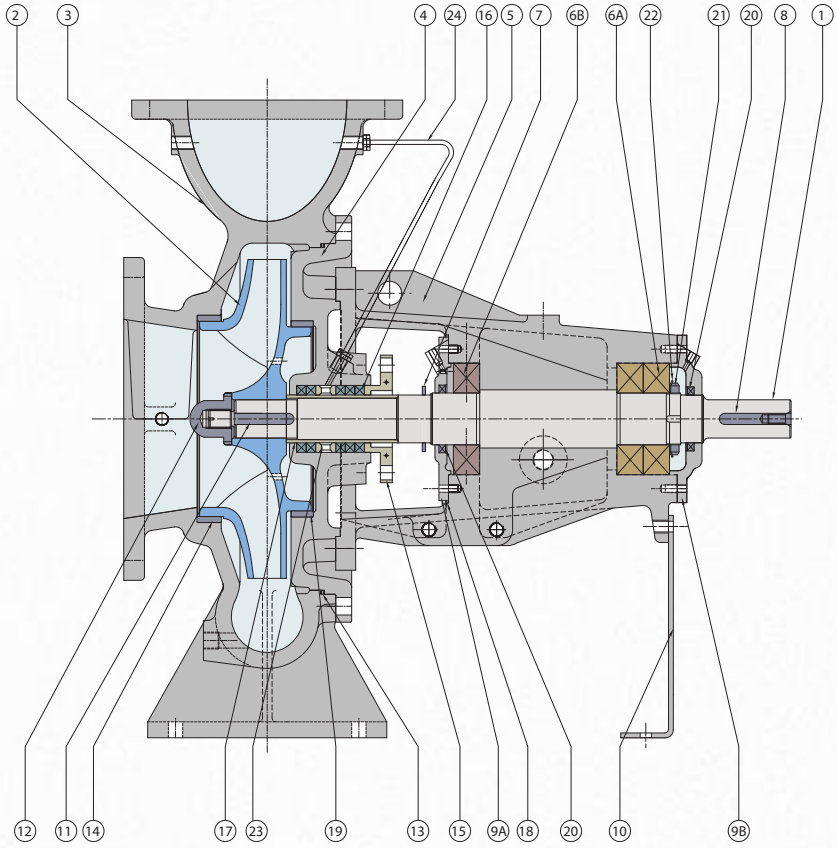

Sl. No.	Description	Qty
1	Shaft	1
2	Impeller	1
3	Casing	1
4	Back Cover	1
5	Bearing Bracket	1
6A	Angular Contact Ball Brg. (Outer) BECB XXXX	2
6B	Cylindrical Roller Brg. (Inner) NU XXX	1
7	Water Thrower	1
8	Coupling Key	1
9A	Bearing End Cover (N.D.E)	1
9B	Bearing End Cover (D.E)	1
10	Support Foot	1
11	Impeller Key	1
12	Impeller Nose Cap	1
13	'O' Ring For Casing	1
14	Casing Wear Ring (Front)	1
15	Split Gland	1
16	Gland Packing	1
17	Shaft Sleeve	1
18	'O' Ring For Back Cover	1
19	Casing Wear Ring (Back)	1
20	Oil Seal	1+1
21	Bearing Lock Nut	1
22	Bearing Lock Washer	1
23	Lantern Ring	1
24	Seal Flushing line	1

CROSS-SECTION OF ESL END SUCTION PUMP (MECHANICAL SEAL)

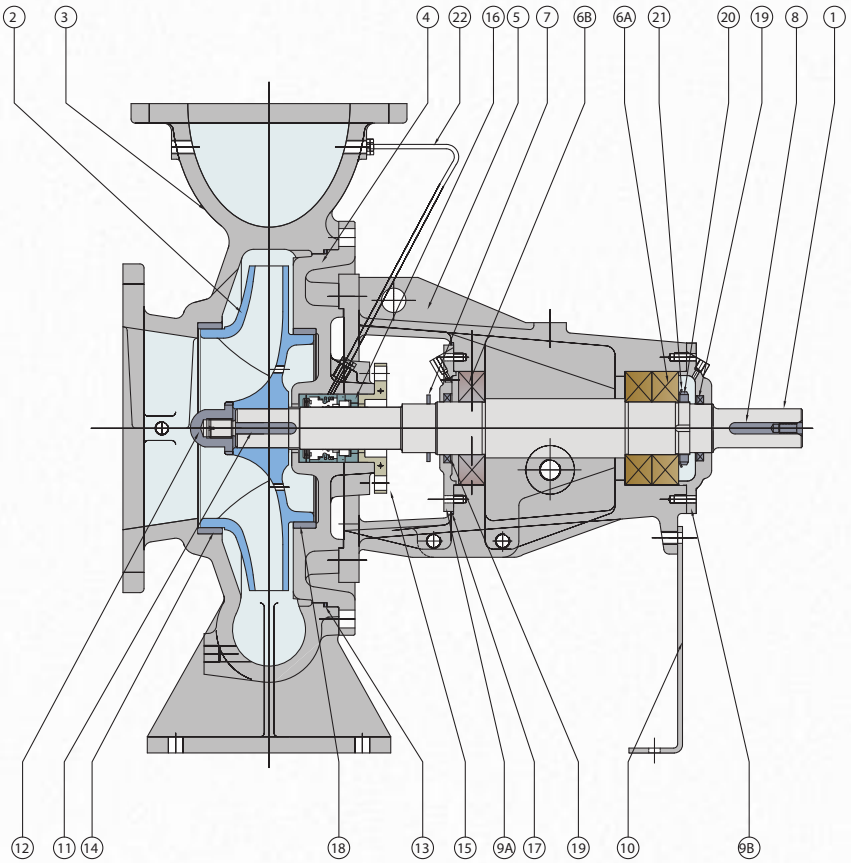

Sl. No.	Description	Qty
1	Shaft	1
2	Impeller	1
3	Casing	1
4	Back Cover	1
5	Bearing Bracket	1
6A	Angular Contact Ball Brg. (Outer) BECB XXXX	2
6B	Cylindrical Roller Brg. (Inner) NU XXX	1
7	Water Thrower	
8	Coupling Key	1
9A	Bearing End Cover (N.D.E)	1
9B	Bearing End Cover (D.E)	1
10	Support Foot	1
11	Impeller Key	1
12	Impeller Nose Cap	1
13	'O' Ring For Casing	1
14	Casing Wear Ring (Front)	1
15	Gland Plate	1
16	Mechanical Seal	1
17	'O' Ring For Back Cover	1
18	Casing Wear Ring (Back)	1
19	Oil Seal	1+1
20	Bearing Lock Nut	1
21	Bearing Lock Washer	1
22	Seal Flushing Line	1

MATERIAL EQUIVALENCE CHART

Part No	Part Name	Standard Fitted Pump	British Standard	ASTM Standard	Din Standard	Din Material Number	Din Specification
1	Casing	Cast Iron	BS1452 Grade 260	A48 Class 35	GG25	0.6025	DIN1691
2	Impeller	Bronze	BS1400 LG2	B584 C83600	CuSn5Zn5Pb5-C	2.1096.01	DIN 1705
3	Front Casing Wear Ring	Bronze	BS1400 LB2	B584 C93700	CuSn10Pb10-C	2.1182.03	DIN1705
4	Back Casing Wear Ring	Bronze	BS1400 LB2	B584 C93700	CuSn10Pb10-C	2.1182.03	DIN1705
5	Shaft	Stainless Steel	BS970 410 S21	A276 Type 410	X 10 Cr 13	1.4006	DIN1705
6	Back Cover	Cast Iron	BS1452 Gr 260	A48 Class 35	GG25	0.6025	DIN1691
7	Bearing Bracket	Cast Iron	BS1452 Gr 260	A48 Class 35	GG25	0.6025	DIN1691
8	Baering End Cover Outer	Cast Iron	BS1452 Gr 260	A48 Class 35	GG25	0.6025	DIN1691
9	Bearing End Cover Inner	Cast Iron	BS1452 Gr 260	A48 Class 35	GG25	0.6025	DIN 1691
10	Impeller Nose Cap	Stainless Steel	BS970 410 S21	A276 Type 410	X 10 Cr 13	1.4006	DIN1705
11	Gland	Bronze	BS1400 LG2	B584 C83600	G -CuSn 5 ZnPb	2.1096.01	DIN1705
12	Lantern Ring	Bronze	BS1400 LG2	B584 C83600	G-CuSn 5 ZnPb	2.1096.01	DIN1705
13	Impeller Key	Stainless Steel	BS970 410 S21	A276 Type 410	X 10 Cr 13	1.4006	DIN1705
14	Coupling Key	Stainless Steel	BS970 410 S21	A276 Type 410	X 10 Cr 13	1.4006	DIN1705
15	Shaft Sleeve	Bronze	BS1400 CT1	B427 C 90700	G-CuSn10	2.1050.01	DIN 1705
16	Bearing Spacer (inner)	Mild Steel	BS 970 080M40	EN8	C45	1.1191	DIN1705
17	Bearing Spacer (outer)	Mild Steel	BS 970 080M40	EN8	C45	1.1191	DIN1705
18	Gland Packing	Graphite Impregnated					
19	Mechanical Seal	Burgmann/Flowserve/AES or Equivalent					
20	Bearing	SKF/FAG					
21	Bearing Lock Nut	SKF/FAG					
22	Bearing Locking Washer	SKF/FAG					
23	Water Thrower	Neoprene Rubber					
24	O-ring	NITRILE					
25	Gasket	Vegetable Fibre Based 0.5 mm Sheet					
26	Bearing Oil Seal	SKF					
27	Seal piping	3/8" dia Copper Pipe					
28	Seal Flow Control Device	Ball Valve					
29	Support Foot	FABRICATED STEEL					

OPTIONAL CONSTRUCTION

PART NO	PART NAME	SPECIAL MATERIAL	BRITISH STANDARD	ASTM STANDARD	DIN STANDARD	DIN MATERIAL NUMBER	DIN SPECIFICATION
1.	Casing	Ductile Iron	BS 2789 Gr.500/7	A536, 60-45-12	GGG50	0.705	DIN 1693
		Cast Steel	BS 3100 Gr.A1	A216 WCB	GS- C25	1.0619	DIN17245
		Stainless Steel	BS3100-316 C16	ASTM A743 Gr.CF-8M	GX6CrNiMo18 10	1.4408	
		Ni Resist	BS3468 L-NiCuCr 15 6 2	A436 Type 1	GGL -NiCuCr15 6 2	0.6655	
2.	Impeller	Cast Iron	BS1452 Gr260	A48 Class 35	GG25	0.6025	DIN1691
		Zinc Free Bronze	BS 1400 CT1	B427 C90700	G-CuSn10	2.1050.01	DIN 1705
		Stainless Steel	BS3100-316 C16	ASTM A743 Gr.CF-8M	GX6CrNiMo18 10	1.4408	
			BS3100-410 C21	ASTM A743 Gr.CA 15	G-X 8 CrNi 13	1.4008	
3.	Shaft	HT Steel	BS970-708 M40	A322 Gr4140	42 CrMo4	1.7225	DIN 17200
		Stainless Steel	BS970 316 S 16	ASTM A 276 Type316	X5CrNiMo17 12 2	1.4401	
			BS970-304 S15	ASTM A 276 Type304	X5 CrNi18 10	1.4301	

GENERAL ARRANGEMENT DRAWING OF LARGE END SUCTION PUMP

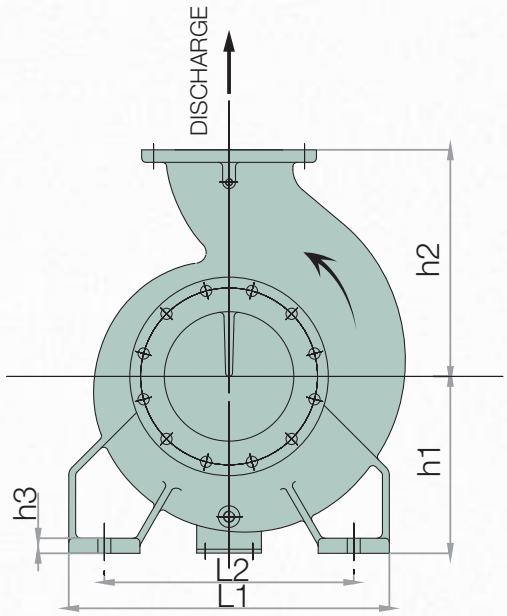

VIEW FROM 'X'

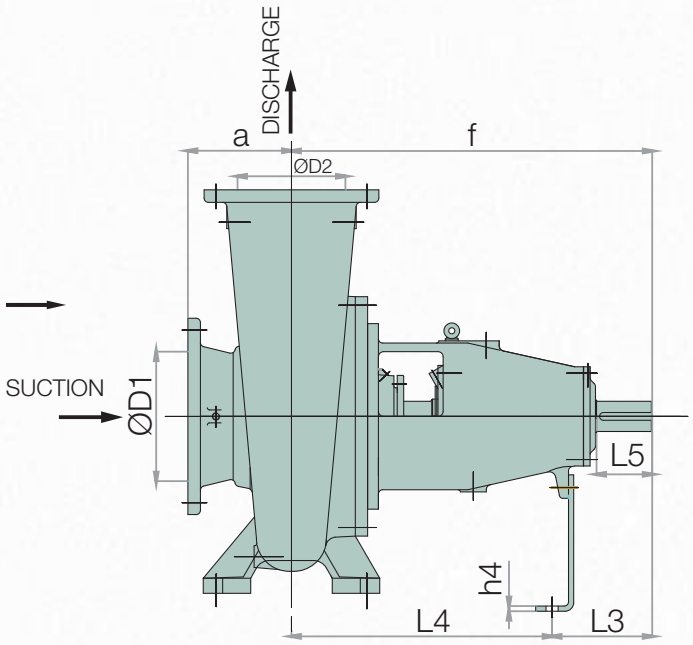

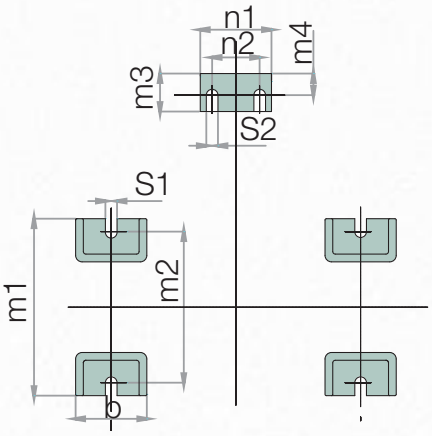

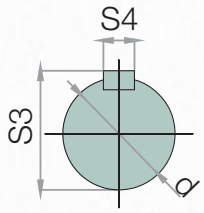

SHAFT DETAILS AT COUPLING END

ESL PUMP DIMENSIONS

Sl. No	Pump Model	Size		Shaft	Pump Dimensions				Mounting Dimensions															Shaft Dimensions				Weight (kg)
		D1	D2	Grroup	a	f	h1	h2	b	h3	h4	m4	m1	m2	m3	L1	L2	n1	n2	s1	s2	L3	L4	d	L5	s3	s4	
1	ESL 150-450	200	150	ES-4	230	670	375	480	100	28	6	34.5	200	150	66	616	520	150	110	22	20	181	490	48	108.5	51.8	14	440
2	ESL 150-500	200	150	ES-4	160	670	400	500	120	24	9	34.5	200	150	66	525	450	150	110	22	20	180.5	500	48	110	51.8	14	460
3	ESL 200-260	200	200	ES-4	245	757.5	300	375	140	20	12	34.5	400	340	65	650	510	150	110	22	20	212	545	48	110	51.8	14	305
4	ESL 200-315	250	200	ES-4	180	679	315	450	140	20	9	36.5	350	300	65	575	525	150	110	22	22	170	509	48	110	51.5	14	335
5	ESL 200-400	250	200	ES-4	180	675	400	400	150	20	9	36.5	300	230	65	500	370	150	110	22	22	200	475	48	140	51.5	14	350
6	ESL 200-450	250	200	ES-4	160	675	350	450	150	20	6	36.5	200	150	65	550	450	150	110	22	22	200	500	48	140	51.8	14	450
7	ESL 200-500	250	200	ES-5	180	794	435	500	165	35	12	50	340	280	88	743	578	165	110	27	27	232	588	70	129	73.9	18	670
8	ESL 200-550	250	200	ES-5	233.5	794	450	600	165	35	10	50	340	280	88	743	578	165	110	27	27	232	588	70	129	73.9	18	770
9	ESL 200-675	250	200	ES-5	250	900	500	670	165	28	12	50	410	350	88	764	600	165	110	27	27	232	680	70	129	73.9	18	920
10	ESL 250-260	250	250	ES-4	250	727	350	450	165	20	12	36.5	400	340	65	650	510	150	110	22	22	181.5	545.5	48	110	51.8	14	375
11	ESL 250-315	300	250	ES-4	290	780	340	455	165	20	12	36.5	400	340	65	650	510	150	110	22	22	212	568	48	140	51.8	14	425
12	ESL 250-355	300	250	ES-4	250	662	350	450	165	20	12	36.5	310	250	65	650	510	150	110	22	22	181.5	480	48	110	51.8	14	385
13	ESL 250-400	300	250	ES-5	240	836	410	525	165	35	12	50	410	350	88	745	580	165	110	27	27	232	604	70	129	73.9	18	785
14	ESL 250-500	300	250	ES-5	275	834.5	452.5	600	165	28	12	50	410	350	88	765	600	165	110	27	27	232	602.5	70	129	73.9	18	800
15	ESL 250-600	350	250	ES-5	250	809.5	497.5	650	165	28	12	50	410	350	88	764	600.5	165	110	27	27	232	577.5	70	129	73.9	18	850
16	ESL 250-650	300	250	ES-5	280	840	500	750	165	28	12	50	410	350	88	764	600	165	110	27	27	232	600	70	129	73.9	18	900
17	ESL 300-315	300	300	ES-4	240	670	350	400	165	20	9	36.5	400	340	65	650	510	150	110	22	22	170	500	48	110	51.8	14	365
18	ESL 300-400	350	300	ES-5	280	846	410	550	165	28	12	50	410	350	88	764	600	165	110	27	27	232	614	70	129	73.9	18	830
19	ESL 300-450	350	300	ES-5	280	846	410	550	165	28	12	50	410	350	88	764	600	165	110	27	27	232	614	70	129	73.9	18	860
20	ESL 300-550	350	300	ES-5	280	846	470	650	165	28	12	50	410	350	88	764	600	165	110	27	27	232	614	70	129	73.9	18	950
21	ESL 300-575	350	300	ES-5	280	846	530	750	165	28	12	50	410	350	88	764	600	165	110	27	27	232	614	70	129	73.9	18	975
22	ESL 300-600	350	300	ES-5	300	846	530	840	165	28	12	50	410	350	88	764	600	165	110	27	27	232	614	70	129	73.9	18	1000
23	ESL 300-665	350	300	ES-5	380	796	583.5	780	165	42	12	50	386.5	450.5	88	892	694	165	110	27	27	232	563.5	70	129	73.9	18	1250
24	ESL 350-350	350	350	ES-5	280	830	470	560	165	35	12	50	400	340	88	765	600	165	110	27	27	215	615	70	129	73.9	18	700
25	ESL 350-550	450	350	ES-5	300	830	470	650	165	28	12	50	410	350	88	765	600	165	110	27	27	232	615	70	129	73.9	18	800
26	ESL 350-650	400	350	ES-5	300	846	580	780	165	28	12	50	410	350	88	765	600	165	110	27	27	232	615	70	129	73.9	18	900
27	ESL 400-400A	400	400	ES-5	350	850.5	450	600	165	35	12	50	409	349	88	743	578	165	110	27	27	232.5	617.5	70	129	73.9	20	850
28	ESL 400-400B	400	400	ES-5	420	888	540	720	198	35	10	43	491	419	88	892	694	165	110	32.5	27	246.5	640.5	70	203,5	73.9	20	900
29	ESL 400-450	400	400	ES-5	420	888.5	540	720	198	42	12	50	491	419	88	892	694	165	110	32.5	27	232.5	655.5	70	129	73.9	20	1000
30	ESL 400-500	450	400	ES-5	385	833	575	750	198	42	12	50	491	420	88	890	694	165	110	36	27	232.5	600	70	129	73.9	22	1350
31	ESL 400-550	450	400	ES-5	390	900	575	750	198	42	12	50	491	419	88	892	694	165	110	36	27	232.5	650	70	129	73.9	22	1450

Note :
All dimensions are in mm
Dimensions are for reference only and may differ from those of actual construction.

SHAFT SEALING

The pumps are offered with two basic versions:

a) Packed Gland
b) Mechanical Seal

Packed Gland Pumps- Usually five packing rings are used with two rings towards the impeller end and three rings towards the gland end with a lantern ring interposed between two sets of packings. The packings are mounted on renewable shaft sleeves. Shaft packing are offered in variety of materials depending on the characteristics of the liquid handled.

Mechanical Seal fitted Pumps- These are offered with

a) Single unbalanced seal
b) Single balanced seal

The selection of mechanical seal is done based on the pump application and a very large variety of seal options are available. Double mechanical seals can be supplied on request. Additionally, variety of seal piping as per API 684 are offered for special applications.

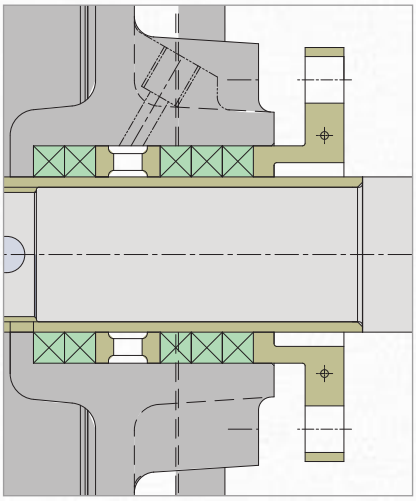

Shaft seal: Gland Pack

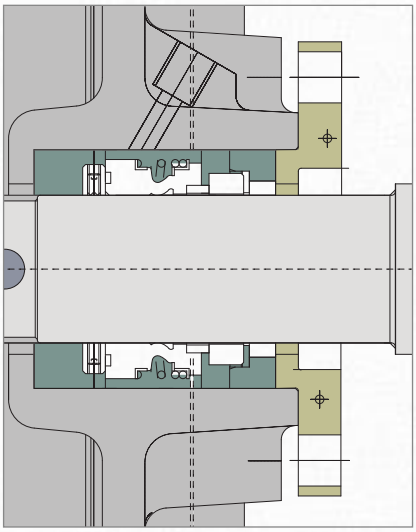

Shaft Seal: Single acting mechanical seal

Acceptance Tests

Acceptance test & QA documentation

The following QA documents are available on request for all pumps:

1) Mill Test report for casing and impeller – Physical / Chemical Certificate.
2) Ultrasonic Test (ASTM-A-388) for shafts
3) Dynamic Balancing report for impeller – ISO 1940 Gr.6.3
4) Hydrostatic Pressure test certificate
5) Performance test certificate as per ISO 9906/2012
6) Dimensional Compliance report.

Torque-Speed Curve

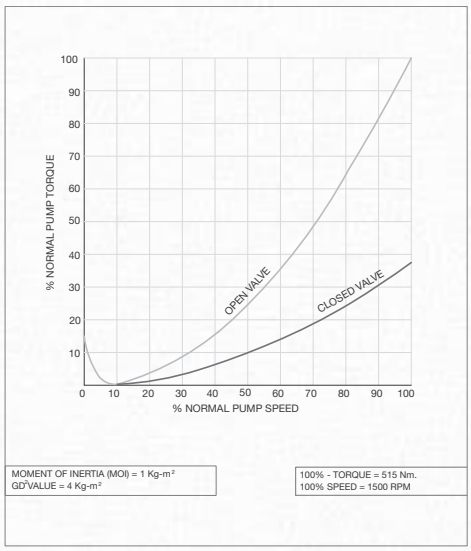

The above speed-torque characteristics shows the variation of torque with speed during pump start up. The curve can be used to estimate the starting time of the electric motor.

PUMP DATA SHEET FOR LARGE END SUCTION PUMP

A. PUMP FRAME

PUMP MODEL	Unit	ESL150-450	ESL150-500	ESL 200-260	ES200-315	ESL 200-400	ESL 200-450	ESL 200-500	ESL 200-550	ESL 200-675	ESL 250-260	ESL 250-315	ESL 250-355	ESL 250-400	ESL 250-500	ESL 250-600
1. Discharge size	mm	150	150	200	200	200	200	200	200	200	250	250	250	250	250	250
2. Suction size	mm	200	200	200	250	250	250	250	250	250	250	300	300	300	300	350
3. Flange rating	Suction	PN16	PN16	PN16	PN16	PN16	PN16	PN16	PN25	PN25	PN16	PN16	PN16	PN16	PN16	PN25
	Delivery	PN16	PN16	PN16	PN16	PN16	PN16	PN16	PN25	PN25	PN16	PN16	PN16	PN16	PN16	PN25
4. Casing Material	BS 1452 Gr. FG 260 as standard. Other grades depending on application.															
5. Casing Thickness	mm	18	20	13	16	16	16	23	20	27	15	14	17	23	25	25
6. Discharge nozzle	Center Line Discharge															
7. Cut Water Clearance	mm	18.5	22	9	17	14	16	18	18.4	24	15	10	16	15	20	22.5
8. Casing Volute Type	mm	Single	Double	Single	Single	Single	Single	Double	Double	Double	Single	Single	Single	Single	Double	Double

B. IMPELLER AND ROTOR

1. Maxm Impeller Diameter	mm	458	547	260	342	400	450	515	568	690	260	315	364	435	515	605
2. Specific Speed	rpm	1088	945	4196	2234	1844	1543	1253	971	794	5044	3701	2430	1898	1477	1214
3. Impeller Type		Radial	Radial	Mixed	Francis	Francis	Radial	Radial	Radial	Radial	Mixed	Francis	Francis	Francis	Radial	Radial
4. No. of vanes		6	6	3	6	6	6	6	6	6	3	3	6	6	6	6
5. Wear Ring clearence dia (max.)	mm	0.376	0.356	0.356	0.402	0.376	0.376	0.382	0.457	0.376	0.376	0.376	0.382	0.382	0.382	0.387
Wear Ring clearence dia.(min.)	mm	0.31	0.31	0.33	0.3	0.31	0.31	0.31	0.38	0.31	0.31	0.31	0.31	0.31	0.31	0.31
6. ID of Casing wear ring	mm	241	235	212	270	245	265	310	285	320	238	258	268	265	285	330
7. Impeller Eye Diameter	mm	212	212	190.5	240	222	240	280	250	291	222	231	240	240	250	290
8. GD ^2 for Maximum Diameter	$Kg.m^2$	5	5.5	0.9	1	1.8	3.1	5.5	5.6	5.8	0.8	1.1	1.3	2.1	5.2	8

C. SHAFT AND BEARINGS

1. Shaft diameter at Impeller	mm	48	48	48	48	48	48	64	64	64	48	48	48	64	64	64
2. Shaft diameter at coupling	mm	48	48	48	48	48	48	70	70	70	48	48	48	70	70	70
3. Bearing Centres	mm	205	205	205	205	205	205	226.5	226.5	226.5	205	205	205	226.5	226.5	226.5
5. Bearing size drive end		2xBECB 7313	2xBECB 7313	2xBECB 7313	2xBECB 7313	2xBECB 7313	2xBECB 7313	2xBECB 7316	2xBECB 7316	2xBECB 7316	2xBECB 7313	2xBECB 7313	2xBECB 7313	2xBECB 7316	2xBECB 7316	2xBECB 7316
6. Bearing size non-drive end		NU 313	NU 313	NU 313	NU 313	NU 313	NU 313	NU 316	NU 316	NU 316	NU 313	NU 313	NU 313	NU 316	NU 316	NU 316
7. Bearing Life	Above 60,000 hrs															
6. Bearing Lubrication	Grease Lubrication as standard. Oil on request															

D. STUFFING BOX

1. Inside Diameter	mm	85	85	85	85	85	85	110	110	110	85	85	85	110	110	110
2. Depth of Box	mm	93	93	93	93	93	93	114	114	114	93	93	93	114	114	114
3. Size of Packing	mm Sq.	12 x 12	12 x 12	12 x 12	12 x 12	12 x 12	12 x 12	16 x 16	16 x 16	16 x 16	12 x 12	12 x 12	12 x 12	16 x 16	16 x 16	16 x 16
4. No. of rings per Box		5	5	5	5	5	5	5	5	5	5	5	5	5	5	5
5. Sleeve Diameter at Box	mm	60	60	60	60	60	60	77	77	77	60	60	60	77	77	77
6. Shaft diameter at mechanical seal	mm	53	53	53	53	53	53	70	70	70	53	53	53	70	70	70
7. Mech. Seal Size(Bergmann or eve)	mm	53	53	53	53	53	53	70	70	70	53	53	53	70	70	70

E. SERVICE LIMITS

1. Maxm working pressure	Bar	16	16	16	16	16	16	16	20	25	16	16	16	16	16	20
2. Maxm Hydrotest pressure	Bar	24	24	24	24	24	24	24	30	37.5	24	24	24	24	24	30
3. Maxm Suction pressure	Bar	5	5	5	5	5	5	5	5	5	5	5	5	5	5	5
4. Maxm Temp packing	ºCelcius	80	80	80	80	80	80	80	80	80	80	80	80	80	80	80
5. Max Temp Mech seal	ºCelcius	80	80	80	80	80	80	80	80	80	80	80	80	80	80	80
6. Maxm Speed	RPM	1800	1800	1800	1800	1800	1800	1800	1800	1800	1800	1800	1800	1800	1800	1800

PUMP DATA SHEET FOR LARGE END SUCTION PUMP

A. PUMP FRAME

PUMP MODEL	Unit	ESL 250-650	ESL 300-315	ESL 300-400	ESL 300-450	ESL 300-550	ESL 300-575	ESL 300-600	ESL 300-665	ESL 350-350	ESL 350-550	ESL 350-650	ESL 400-400A	ESL 400-400B	ESL 400-450	ESL 400-500	ESL 400-550
1. Discharge size	mm	250	300	300	300	300	300	300	300	350	350	350	400	400	400	400	400
2. Suction size	mm	300	300	350	350	350	350	350	350	350	450	400	400	400	400	450	450
3. Flange rating	Suction	PN25	PN16	PN16	PN16	PN16	PN25	PN25	PN25	PN16	PN16	PN25	PN16	PN16	PN16	PN16	PN16
	Delivery	PN25	PN16	PN16	PN16	PN16	PN25	PN25	PN25	PN16	PN16	PN25	PN16	PN16	PN16	PN16	PN16
4. Casing Material	BS 1452 Gr. FG 260 as standard. Other grades depending on application.																
5. Casing Thickness	mm	26	12	18	24	24	25	25	27	16	19	26	14	14	17	16	16
6. Discharge nozzle	Center Line Discharge																
7. Cut Water Clearance	mm	23	16.5	13.5	15.5	19.5	20.8	21	23.5	17	19	23.2	12.5	14.4	24.5	19	20
8. Casing Volute Type	mm	Double	Single	Single	Single	Double	Double	Double	Double	Single	Double	Double	Single	Single	Single	Single	Double

B. IMPELLER AND ROTOR

1. Maxm Impeller Diameter	mm	660	296.5	390	445	555	595	600	665	322.5	540	662	384	410	461	540	556
2.Specific Speed	rpm	976	5568	3204	2266	1791	1220	1696	1418	5774	2372	1306	4218	3985	4606	3095	2212
3. Impeller Type		Radial	Mixed	Francis	Francis	Francis	Radial	Francis	Radial	Mixed	Francis	Radial	Mixed	Mixed	Mixed	Francis	Francis
4. No. of vanes		6	3	6	6	6	6	6	6	3	6	6	3	5	3	6	6
5. Wear Ring clearence dia (max.)	mm	0.382	0.382	0.387	0.387	0.382	0.382	0.382	0.507	0.376	0.382	0.382	0.382	0.43	0.482	0.507	0.507
Wear Ring clearence dia.(min.)	mm	0.31	0.31	0.31	0.31	0.31	0.31	0.31	0.43	0.31	0.31	0.31	0.31	0.43	0.43	0.43	0.43
6. ID of Casing wear ring	mm	330	276	324	315	315	315	321	352	300	310	320	310	335	375	430	430
7. Impeller Eye Diameter	mm	300	253	290	290	278	289	298	312	275.5	280	298	286	310	343	388	390
8. GD ^2 for Maximum Diameter	$Kg.m^2$	8.9	2.8	2.8	4.1	8.1	8.7	9.8	11.2	3.1	5	7.5	8.1	8.2	8.6	9.2	12

C. SHAFT AND BEARINGS

1. Shaft diameter at Impeller	mm	64	48	64	64	64	64	64	64	64	64	64	64	64	64	64	64
2. Shaft diameter at coupling	mm	70	48	70	70	70	70	70	70	70	70	70	70	70	70	70	70
3. Bearing Centres	mm	226.5	205	226.5	226.5	226.5	226.5	226.5	226.5	226.5	226.5	226.5	226.5	226.5	226.5	226.5	226.5
5. Bearing size drive end		2XBECB 7316	2XBECB 7313	2XBECB 7316	2XBECB 7316	2XBECB 7316	2XBECB 7316	2XBECB 7316	2XBECB 7316	2XBECB 7316	2XBECB 7316	2XBECB 7316	2XBECB 7316	2XBECB 7316	2XBECB 7316	2XBECB 7316	2XBECB 7316
6. Bearing size non-drive end		NU 316	NU 313	NU 316	NU 316	NU 316	NU 316	NU 316	NU 316	NU 316	NU 316	NU 316	NU 316	NU 316	NU 316	NU 316	NU 316
7. Bearing Life	Above 60,000 hrs																
6. Bearing Lubrication	Grease Lubrication as standard. Oil on request																

D. STUFFING BOX

1. Inside Diameter	mm	110	85	110	110	110	110	110	110	110	110	110	110	110	110	110	110
2. Depth of Box	mm	114	93	114	114	114	114	114	114	114	114	114	114	114	114	114	114
3. Size of Packing	mm Sq.	16 x 16	12 x 12	16 x 16	16 x 16	16 x 16	16 x 16	16 x 16	16 x 16	16 x 16	16 x 16	16 x 16	16 x 16	16 x 16	16 x 16	16 x 16	16 x 16
4. No. of rings per Box		5	5	5	5	5	5	5	5	5	5	5	5	5	5	5	5
5. Sleeve Diameter at Box	mm	77	60	77	77	77	77	77	77	77	77	77	77	77	77	77	77
6. Shaft diameter at mechanical seal	mm	70	53	70	70	70	70	70	70	70	70	70	70	70	70	70	70
7. Mech. Seal Size(Bergmann or eve)	mm	70	53	70	70	70	70	70	70	70	70	70	70	70	70	70	70

E. SERVICE LIMITS

1. Maxm working pressure	Bar	25	16	16	16	16	20	20	25	16	16	25	16	16	16	16	16
2. Maxm Hydrotest pressure	Bar	37.5	24	24	24	24	30	30	37.5	24	24	37.5	24	24	24	24	24
3. Maxm Suction pressure	Bar	5	5	5	5	5	5	5	5	5	5	5	5	5	5	5	5
4. Maxm Temp packing	ºCelcius	80	80	80	80	80	80	80	80	80	80	80	80	80	80	80	80
5. Max Temp Mech seal	ºCelcius	80	80	80	80	80	80	80	80	80	80	80	80	80	80	80	80
6. Maxm Speed	RPM	1800	1800	1800	1800	1800	1800	1800	1800	1500	1800	1800	1500	1500	1500	1500	1500

OTHER PRODUCTS FROM PUMPSENSE

CSC, New Generation Compact Split Case Pumps, offer high energy efficiency, optimum mechanical reliability and smallest foot print for air conditioning and industrial casting applications. These pumps are also offered in vertical and high pressure configurations

Our single stage range of NFPA20 fire pumps cover duties up to 5000usgpm and beyond. Pumps can be supplied with certification by independent inspection agencies

Standard split case range covers both single and two stage pumps for capacities upto 300m3/hr and heads up to 200m. Many customized options are available

Complete range of ISO 2858 End Suction pumps are optimized for highest possible efficiency. All pumps are available in high working pressure versions with strengthened bearing arrangement

“SW” series of dry pit sewage pups are available in sizes upto 600mm for flows upto 3000 m3/hr. Pumps have two/three vanes non-clog impellers and are offered both in horizontal & vertical configurations.

Two stage split case pumps are available for high pressure cleaning and high head industrial applications. Pumps are offered with both internal and external cross-over for capacities up to 100m3/hr and head up to 400m

Single stage double volute split case pumps are offered both in horizontal and vertical shaft configuration. Customised designs are offered for special applications

Two stage NFPA20 Split Case fire pumps incorporate two double entry impellers for high suction capability and complete axial thrust balance. The pumps are available for rated flows up to 1500gpm and heads up to 300mat 2950rpm

Test Bed at Pumpsense is fully compliant with requirements of ISO9906. Test set up is fully automated for data aquisation

We upgrade our product continuously. The information contained in this brochure should be used for general guidelines only since they are subject to change without notice.

PUMPSENSE FLUID ENGINEERING PVT. LTD

5/F, Hastings Court, Tower A , 96, Garden Reach Road, Kolkata – 700023, INDIA

Tel: +91-33- 24591861/1862 Fax: +91-33-24591862

Web: worldofpumps.com email: enquiries@worldofpumps.com

design & print anderson