PUMPSENSE

Fluid Engineering Pvt. Ltd

CSC New Generation Compact Split Case Pumps

- High Energy Efficiency
- Optimum Mechanical Reliability
- Smallest Foot-Print
- Large Numbers of Pumps
- Vertical Shaft And High Working Pressure Options

CSC – Compact Split Case Pumps

This range has been designed as the new generation of split case pumps for meeting the reliability and energy optimization needs of the expanding industrial, municipal and building services markets. Three major objectives for building this new range have been:

- Optimum Efficiency
- Highest Reliability
- Smallest foot-print

CSC – Relative Advantages over conventional split case pumps

- **Simple Design** – Easy to dismantle and assemble.
- **Short Shaft Span** – Reduces shaft deflection. Increases Bearing and Seal lives.
- **Simple Machining** – Casing machining is simpler, faster and eliminates chances of errors.
- **Lesser Installation Space** – Smaller foot-print releases expensive floor space for productive use.

CSC – Application Areas

CSC pumps are ideal in installations where pumps are required for long, uninterrupted service with minimum of maintenance and where mechanical seal fitted pumps are a natural choice:

- Industrial & Urban Water Supply
- Air Conditioning
- Process Industry

These pumps will particularly benefit those pumping plants where energy costs constitute a significant part of the life cycle cost of the plant.

CSC – Design Features

- **Optimum Efficiency** – Hydraulic Institute Standards & Europump Norms have been used as bench marks for acceptable minimum efficiency for this range.
- **Proven Hydraulic Designs** – Established hydraulics have been used wherever the above benchmark has been met or exceeded.
- **Optimized Selection** – A large number of frames help to find a pump operating close to "best efficiency point" for any duty cluster.
- **Double Volute Casing** – This has been used as standard for all pumps with 100 mm NB delivery branch and above. Double volute construction eliminates radial loading and enhances seal, bearing and shaft lives when pumps are run at part flow condition.
- **Maximum Working Pressure** – CI FG260 casing with PN16 flanges are used for working pressures up to 12 bar. Ductile Iron GGG50 casing with PN25 flanges are used for working pressures up to 20 bar. The design permits standard pre-engineered pumps to be used for both normal and high suction pressure applications.
- **Product Variants** – Four Pre-engineered product variants are available:

  MS – Standard Pump – 12 bar working pressure

  HP – High Pressure – 20 bar working pressure

  VE – Vertical Execution – 12 or 20 bar.

  PG – Packed Gland Stuffing Box instead of mechanical seals.
- **Low Shaft Stress & Shaft Deflection** – Shafts have been designed to ensure low shear stress across the range and deflection of less than 0.05 mm at the stuffing boxes. This ensures vibration free operation and long seal / bearing life.

COMPACT SPILT CASE PUMPS

RANGE CHART AT 4 POLE, 50 HZ SPEED

CSC SERIES

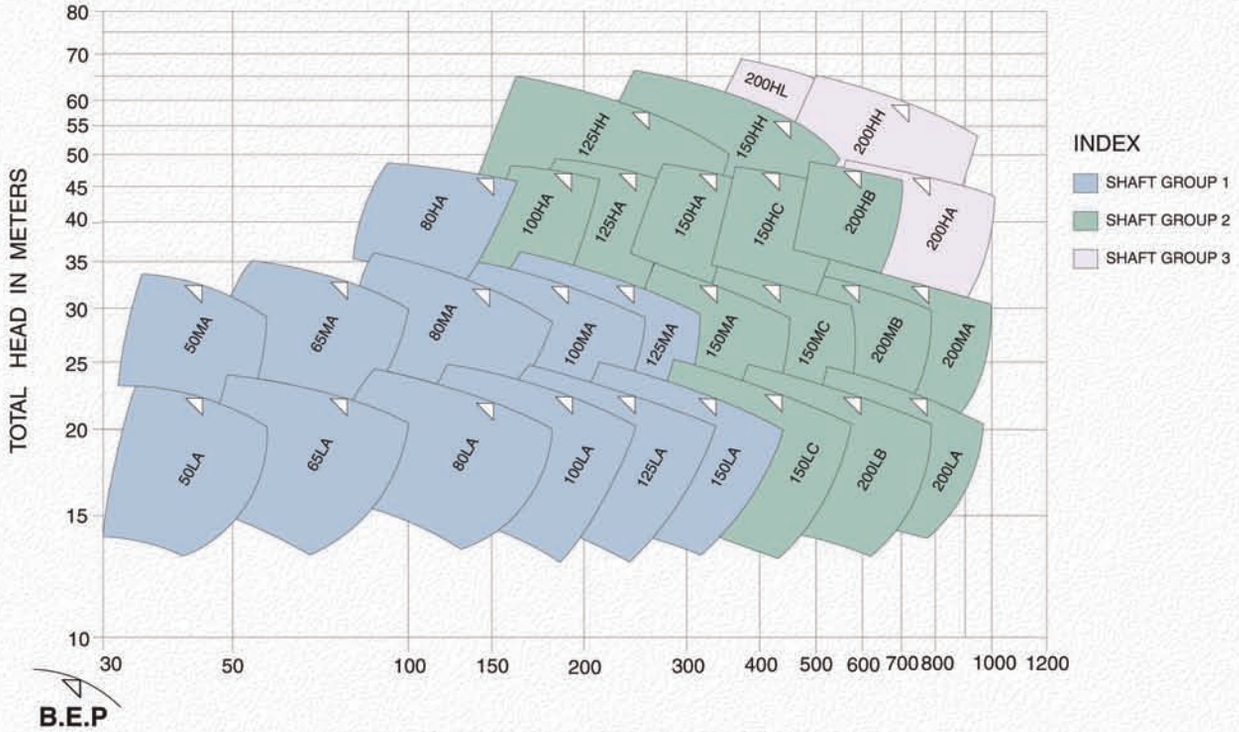

CAPACITY IN CUBIC METER PER HOUR

COMPACT SPILT CASE PUMPS

RANGE CHART AT 4 POLE, 60 HZ SPEED

CSC SERIES

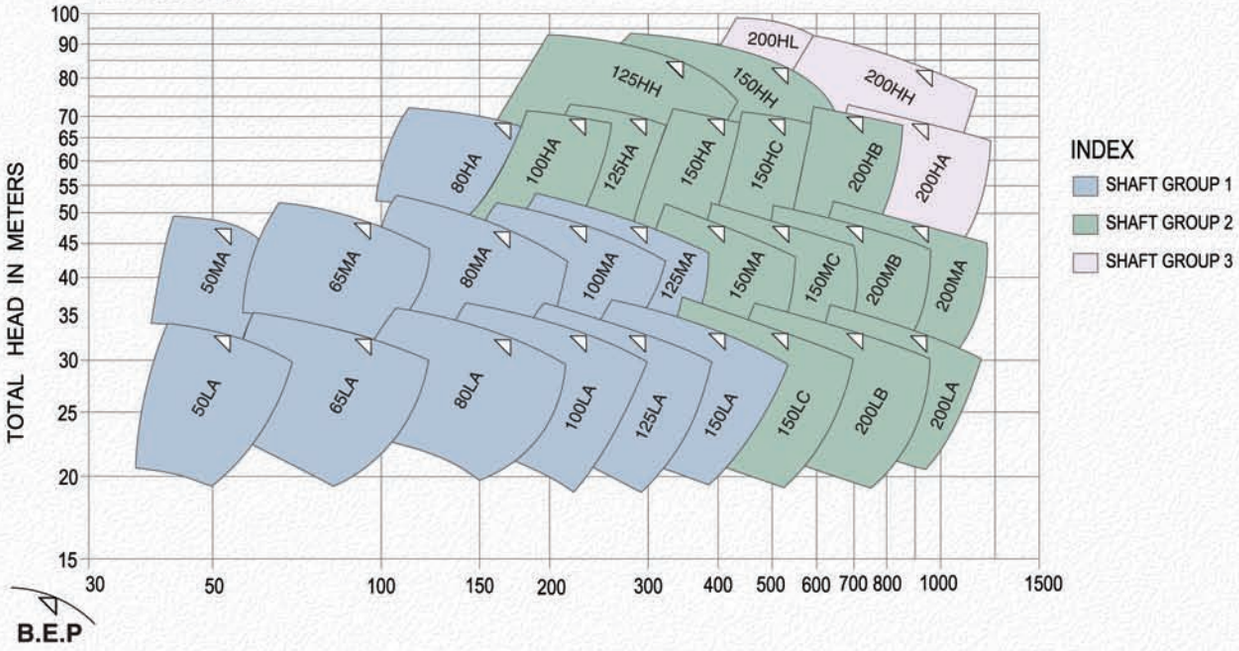

CAPACITY IN CUBIC METER PER HOUR

Pre-engineered Product Variants

Δ MS - Standard Pump - 12 bar working pressure
Δ HP - High Pressure - 20 bar working pressure
Δ VE - Vertical Execution - 12 or 20 bar working pressure
Δ PG - Packed Gland Stuffing Box instead of mechanical seals

Product Highlights

Double entry impeller balances the axial thrust & ensures longer bearing & seal lives; low noise & vibration & greater reliability

Easily renewable casing wear rings for maintaining proper running clearances for optimum pump efficiency. They are positively locked in place in the lower case to prevent rotation during operation

Casing designed to withstand high working pressure & pressure surges with minimum of distortion. All casings are hydrostatically tested at 150% of maximum working pressure. True axial split case design for pressure boundary integrity. HP Version for high working pressure application

Large diameter shaft with shortest possible bearing span designed for minimum deflection for longer seal & bearing lives in the toughest service conditions.

Precision machined & dowelled for accuracy during re-assembly after maintenance & parts replacement

Axially split case design allows easy removal of rotating assembly & inspection of components by removing top-half without disturbing pipe-work & alignment with the prime mover

Smooth water ways & fully machined exterior surfaces of impeller ensure high pump efficiency

Robust foot mounted design with suction & delivery flanges close to the pump feet provides protection against external forces & moments

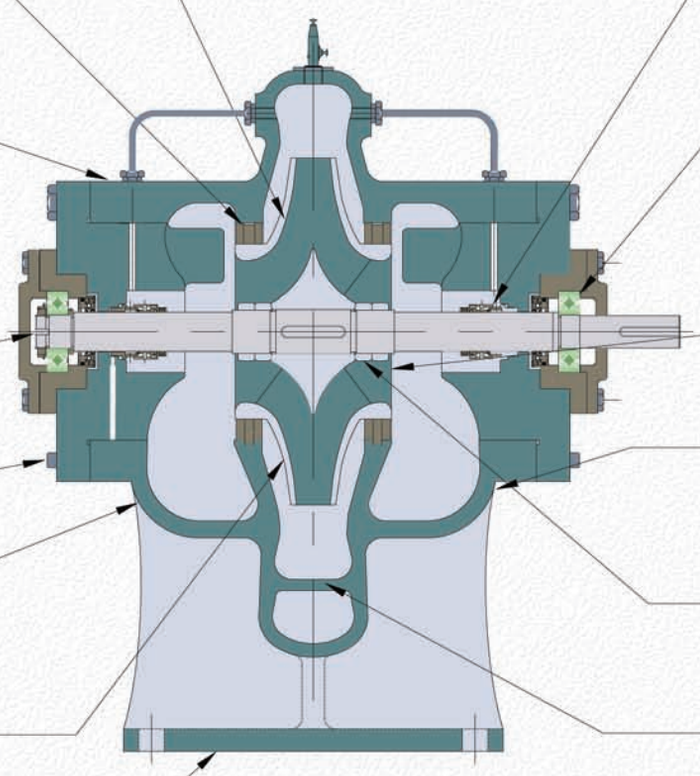

Wide variety of mechanical seals are offered to suit specific application. Packed gland pumps are also available as option

Dust tight sealed for life deep groove ball bearings with average L10 life exceeding 100,000 hours for maintenance free pump operation .Option for external grease lubrication is also available

Double suction impeller enhances suction capability & reduces NPSH requirement of the pump

Suction & discharge flanges are integrally cast into lower half casing ensuring high structural integrity when connected to the piping system & greater resistance to moments induced by nozzle loading

Large diameter shaft with minimum possible bearing span ensures minimum shaft deflection & ensures long seal & bearing lives.

Double volute design has been adopted (for 100NB delivery branch & above) to reduce the radial thrust and is ideal when the pump is subjected to off-peak opearating conditions. Double volute construction ensures longer bearing & seal lives.

Compact Design

- Smaller footprint saves expensive floor space
- Through bore arrangement reduces machining time and improves machining accuracy
- Lesser number of parts makes maintainence easy in terms of dismantling & reassembly and management of spare parts

GENERAL ARRANGEMENT DRAWING FOR HORIZONTAL COMPACT PUMPS WITH MOTORS

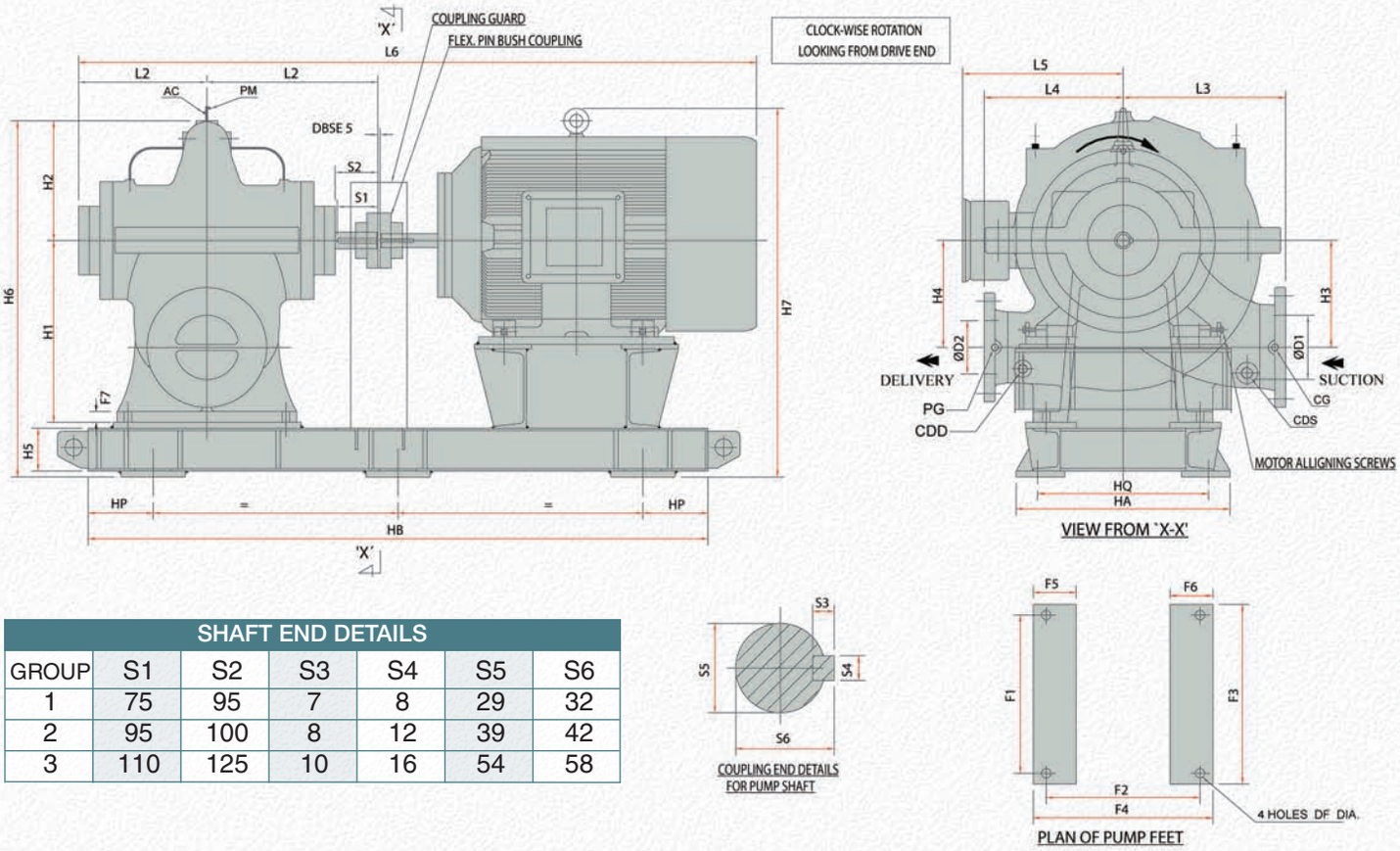

SHAFT END DETAILS						
GROUP	S1	S2	S3	S4	S5	S6
1	75	95	7	8	29	32
2	95	100	8	12	39	42
3	110	125	10	16	54	58

DIMENSION SHEET FOR SINGLE STAGE COMPACT HORIZONTAL SPLIT CASE PUMPS WITH MOTORS

PUMP	MOTOR	FRAME	SIZE		SHAFT	OVER ALL DIMENSIONS													BASE DIMENSIONS												APPROX. WEIGHTS (kg.)
MODEL	IN kW	SIZE	D1	D2	GROUP	L1	L2	L3	L4	L5	L6	H1	H2	H3	H4	H5	H6	H7	F1	F2	F3	F4	F5	F6	F7	HB	HA	HP	HQ	DF	Bare Pump
50LA	5.5	132S	80	50	1	263	358	230	230	230	1096	190	125	105	105	100	443	624	150	250	175	290	50	50	20	1064	450	152	350	16	85
50MA	7.5	160M	80	50	1	263	358	255	255	275	1231	230	150	130	130	100	508	624	180	348	260	415	60	60	20	1192	500	152	400	16	105
	9.3	160M								275	1231					100	508	624								1192	500	152	400		
65LA	7.5	160M	80	65	1	263	358	250	210	275	1231	245	185	160	160	100	553	624	200	250	240	290	60	60	20	1192	450	152	350	16	150
	9.3	160M								275	1231					100	553	624								1192	450	152	350		
65MA	15	160L	80	65	1	263	358	300	250	275	1236	300	225	200	200	100	653	644	248	310	292	355	70	70	20	1192	450	152	350	16	187
	11	160M								275	1191					100	653	644								1164	450	152	350		
80LA	15	160L	100	80	1	263	358	280	210	275	1276	280	190	180	180	100	598	624	200	250	240	290	70	70	20	1180	450	152	350	16	160
80MA	18.5	180M	100	80	1	263	358	330	250	295	1263	325	232	218	218	100	685	691	248	310	292	355	70	70	20	1216	450	152	350	16	201
	22	180L								295	1301					100	685	691								1224	450	152	350		
80HA	30	200L	100	80	1	263	358	370	280	345	1431	350	260	240	240	100	738	758	280	350	330	400	70	70	20	1330	500	152	400	16	240
100LA	18.5	180M	125	100	1	263	358	270	220	295	1303	335	196	195	195	100	659	701	230	312	280	380	70	70	20	1204	450	152	350	18	180
100MA	30	200L	125	100	1	263	358	350	286	345	1431	360	229	218	218	100	717	768	290	358	340	438	100	100	20	1330	500	152	400	18	245
100HA	37	225S	125	100	2	300	400	385	310	375	1585	405	270	220	220	100	803	842	290	400	340	460	100	100	20	1450	550	152	450	18	270
125LA	22	180L	150	125	1	263	358	350	250	295	1341	350	235	220	220	100	678	716	310	250	355	300	100	100	22	1244	500	152	400	16	260
125MA	30	200L	150	125	1	263	358	375	300	345	1431	389	236	227	227	100	753	797	290	408	340	486	100	100	20	1330	550	152	450	18	275
	37	225S								375	1506					100	753	826								1370	550	152	450		
125HA	45	225M	150	125	2	300	400	380	325	375	1585	425	290	250	250	100	853	862	370	420	360	420	100	100	25	1450	500	152	400	22	330
125HH	75	280S	150	125	2	300	400	420	305	430	1790	390	300	270	270	125	843	815	285	330	350	400	100	100	20	1654	485	152	385	18	285
150LA	30	200L	200	150	1	263	358	350	265	345	1431	380	260	230	230	100	768	788	290	430	340	490	100	100	20	1330	585	152	485	18	275
150MA	45	225M	200	150	2	300	400	400	320	375	1585	415	263	250	250	125	828	877	440	395	500	460	100	100	25	1450	550	152	450	22	340
150HA	75	280S	200	150	2	300	400	390	310	430	1790	490	330	270	270	125	973	1005	325	490	380	560	100	100	20	1654	545	152	645	22	400
200LC	37	225S	200	200	2	300	400	390	320	375	1585	350	240	220	220	125	758	812	335	480	390	550	100	100	20	1450	635	152	535	22	290
150MC	55	250M	200	150	2	300	400	390	320	405	1645	400	275	250	250	125	833	906	360	500	420	570	100	100	20	1514	650	152	550	22	360
150HC	75	280S	200	150	2	300	400	425	390	430	1790	450	292	275	275	125	903	965	370	360	420	420	100	100	25	1654	500	152	400	22	430
	90	280M								515	1790					125	903	965								1654	500	152	400		
150HH	90	280M	200	150	2	300	400	410	360	515	1790	410	315	270	270	125	886	838	360	360	425	420	100	100	20	1654	500	152	400	22	460
200LB	55	250M	200	200	2	300	400	400	325	405	1645	450	289	265	265	125	763	856	440	260	500	425	82.5	82.5	25	1514	615	152	515	22	310
200MB	75	280S	200	200	2	300	400	440	350	430	1790	430	305	285	285	125	883	945	365	490	426	560	100	100	20	1654	645	152	545	22	385
200HB	110	315S	200	200	2	300	400	420	350	510	1935	430	325	275	275	125	943	1023	370	520	430	560	100	100	20	1804	685	152	585	22	460
200HL	132	315M	200	200	3	342	467	450	400	510	2043	500	345	300	300	150	1031	1096	360	440	425	500	100	100	30	1904	625	152	525	26	625
250LA	75	280S	250	250	2	300	400	430	350	430	1790	410	280	255	255	125	876	958	430	490	490	532	100	100	20	1654	650	152	550	22	445
200MA	90	280M	250	200	2	300	400	440	350	515	1790	460	315	285	285	125	928	975	440	500	540	580	100	100	25	1654	700	152	600	22	500
200HA	132	315M	250	200	3	342	467	490	380	510	2043	500	335	310	310	150	1021	1096	440	390	500	460	100	100	30	1904	585	152	485	26	580
200HH	180	315L	250	200	3	342	467	450	365	570	2190	490	340	295	295	150	1016	1121	360	440	425	550	100	100	30	1730	675	160	575	26	625

GENERAL ARRANGEMENT DRAWING FOR VERTICAL COMPACT PUMPS WITH MOTORS

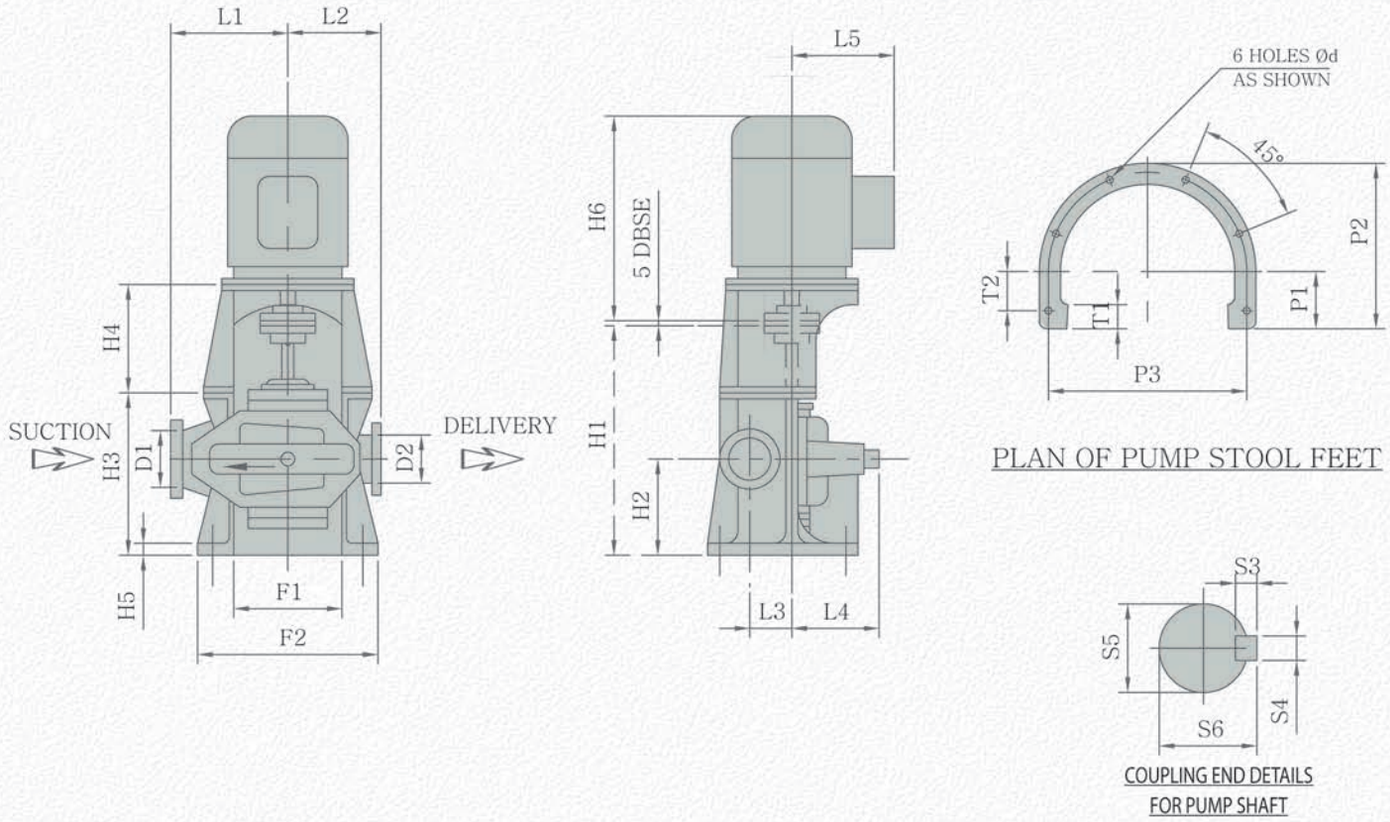

DIMENSION SHEET FOR SINGLE STAGE COMPACT VERTICAL SPLIT CASE PUMPS WITH MOTORS

SL	PUMP	SIZE		SHAFT	OVERALL DIMENSIONS								MOUNTING DIMENSIONS								SHAFT END					APPROX	
NO.	MODEL	D1	D2	GROUP	H1	H2	H3	H4	L1	L2	L3	L4	F1	F2	F3	F4	F5	F6	F7	DF	S1	S2	S3	S4	S5	S6	WT(Kg)
1	50LA	80	50	GR-1	190	125	105	105	263	358	230	230	150	250	175	290	50	50	20	16	75	95	7	8	29	32	85
2	50MA	80	50	GR-1	230	150	130	130	263	358	255	255	180	348	260	415	60	60	20	16	75	95	7	8	29	32	105
3	65LA	80	65	GR-1	245	185	160	160	263	358	250	210	200	250	240	290	60	60	20	16	75	95	7	8	29	32	150
4	65MA	80	65	GR-1	300	225	200	200	263	358	300	250	248	310	292	355	70	70	20	16	75	95	7	8	29	32	187
5	80LA	100	80	GR-1	280	190	180	180	263	358	280	210	200	250	240	290	70	70	20	16	75	95	7	8	29	32	160
6	80MA	100	80	GR-1	325	232	218	218	263	358	330	250	248	310	292	355	70	70	20	16	75	95	7	8	29	32	201
7	80HA	100	80	GR-1	350	260	240	240	263	358	370	280	280	350	330	400	70	70	20	16	75	95	7	8	29	32	240
8	100LA	125	100	GR-1	335	196	195	195	263	358	270	220	230	312	280	380	70	70	20	18	75	95	7	8	29	32	180
9	100MA	125	100	GR-1	360	229	218	218	263	358	350	286	290	358	340	438	100	100	20	18	75	95	7	8	29	32	245
10	100HA	125	100	GR-2	405	270	220	220	300	400	385	310	290	400	340	460	100	100	20	18	95	100	8	12	39	42	270
11	125LA	150	125	GR-1	350	235	220	220	263	358	350	250	310	250	355	300	100	100	22	16	75	95	7	8	29	32	260
12	125MA	150	125	GR-1	389	236	227	227	263	358	375	300	290	408	340	486	100	100	20	18	75	95	7	8	29	32	275
13	125HA	150	125	GR-2	425	290	250	250	300	400	380	325	370	420	360	420	100	100	25	22	95	100	8	12	39	42	330
14	125HH	150	125	GR-2	390	300	270	270	300	400	420	305	285	330	350	400	100	100	20	18	95	100	8	12	39	42	285
15	150LA	200	150	GR-1	380	260	230	230	263	358	350	265	290	430	340	490	100	100	20	18	75	95	7	8	29	32	275
16	150MA	200	150	GR-2	415	263	250	250	300	400	400	320	440	395	500	460	100	100	25	22	95	100	8	12	39	42	340
17	150HA	200	150	GR-2	490	330	270	270	300	400	390	310	325	490	380	560	100	100	20	22	95	100	8	12	39	42	400
18	200LC	200	200	GR-2	350	240	220	220	300	400	390	320	335	480	390	550	100	100	20	22	95	100	8	12	39	42	290
19	150MC	200	150	GR-2	400	275	250	250	300	400	390	320	360	500	420	570	100	100	20	22	95	100	8	12	39	42	360
20	150HC	200	150	GR-2	450	292	275	275	300	400	425	390	370	360	420	420	100	100	25	22	95	100	8	12	39	42	430
21	150HH	200	150	GR-2	410	315	270	270	300	400	410	360	360	360	425	420	100	100	20	22	95	100	8	12	39	42	460
22	200LB	200	200	GR-2	450	289	265	265	300	400	400	325	440	260	500	425	82.5	82.5	25	22	95	100	8	12	39	42	310
23	200MB	200	200	GR-2	430	305	285	285	300	400	440	350	365	490	426	560	100	100	20	22	95	100	8	12	39	42	385
24	200HB	200	200	GR-2	430	325	275	275	300	400	420	350	370	520	430	560	100	100	20	22	95	100	8	12	39	42	460
25	200HL	200	200	GR-3	500	345	300	300	342	467	450	400	360	440	425	500	100	100	30	26	110	125	10	16	54	58	625
26	250LA	250	250	GR-2	410	280	255	255	300	400	430	350	430	490	490	532	100	100	20	22	95	100	8	12	39	42	445
27	200MA	250	200	GR-2	460	315	285	285	300	400	440	350	440	500	540	580	100	100	25	22	95	100	8	12	39	42	500
28	200HA	250	200	GR-3	500	335	310	310	342	467	490	380	440	390	500	460	100	100	30	26	110	125	10	16	54	58	580
29	200HH	250	200	GR-3	490	340	295	295	342	467	450	365	360	440	425	550	100	100	30	26	110	125	10	16	54	58	625

Note:
All dimensions are in mm.
Dimensions are for reference only and may differ from those of actual construction.

PUMPSENSE *CSC* RANGE

TECHNICAL DATA SHEET FOR COMPACT SPLIT CASE PUMPS

A.PUMP FRAME	Unit	50LA	50MA	65LA	65MA	80LA	80MA	80HA	100LA	100MA	100HA	125LA	125MA	125HA	125HH	150LA	150MA	150HA	200LC	150MC	150HC	150HH	200LB	200MB	200HB	200HL	250LA	200MA	200HA	200HH
1. Delivery Branch Size	mm	50	50	65	65	80	80	80	100	100	100	125	125	125	125	150	150	150	200	150	150	150	200	200	200	200	250	200	200	200
2. Suction Branch Size	mm	80	80	80	80	100	100	100	125	125	125	150	150	150	150	200	200	200	200	200	200	200	200	200	200	200	250	250	250	250
3. Flange rating	PN16 AS STANDARD ANSI 125# & OTHER FLANGES ON REQUEST.																													
4. Casing Material	CAST IRON BS EN 1561 GRADE 250 AS STANDARD . OTHER GRADES RECOMMENED DEPENDING UPON THE APPLICATION.																													
5. Casing Thickness	mm	10	10	10	12	12	12	12	12	12	12	12	12	12	12	12	12	12	12	12	12	12	12	12	12	14	12	12	12	15
6. No. of Stages		1	1	1	1	1	1	1	1	1	1	1	1	1	1	1	1	1	1	1	1	1	1	1	1	1	1	1	1	1
7. Split Flange Gasket	mm	0.4	0.4	0.4	0.4	0.4	0.4	0.4	0.4	0.4	0.4	0.4	0.4	0.4	0.4	0.4	0.4	0.4	0.4	0.4	0.4	0.4	0.4	0.4	0.4	0.4	0.4	0.4	0.4	0.4
Shaft Group	1	1	1	1	1	1	1	1	1	1	2	1	1	2	2	1	2	2	2	2	2	2	2	2	2	3	2	2	3	3

B. IMPELLER AND ROTOR

1. Maxm Impeller Diameter	mm	272	325	278	340	286	346	394	293	334	400	300	334	404	440	300	353	410	313	360	408	438	320	370	424	440	332	360	420	445
2. Weight of Impeller	Kg	11	13	13	15	13	18	21	19	21	28	18	23	27	44	17	25	28	21	28	32	46	32	34	35	58	29	34	39	61
3. Weight of Rotating Element	Kg	21	23	23	25	23	28	31	29	31	41	28	33	40	57	27	38	41	34	41	45	59	45	47	48	75	42	47	56	78
4. ID of Casing Wear Ring	mm	82	90	95	105	130	148	125	137	180	165	160	180	163	175	170	200	175	187	205	200	198	221	210	224	239	220	232	230	235
5. Impeller Eye Diameter	mm	67	70	80	85	114	124	100	122	150	140	144	150	135	151	154	168	180	172	176	172	170	189	180	197	196	205	210	200	208
6. Impeller Eye Area	Sq cm	161	232	202	144	254	200	400	300	262	420	269	262	214	306	412	370	526	456	410	392	378	484	432	670	480	680	696	504	556
7. GD ^2 for Maximum Diameter	$Kg.m^2$	0.35	0.9	0.48	1.25	0.5	1.3	2	0.9	1.8	2.2	1	1.6	3.5	3.5	1.8	1.9	3.9	1	2.1	2.8	2.8	2.1	3	3.2	6	2.4	3.2	4	6

C. SHAFT AND BEARINGS

1. Shaft diameter at Impeller	mm	40	40	40	40	40	40	40	40	40	52	40	40	52	52	40	52	52	52	52	52	52	52	52	52	64	52	52	64	64
2. Shaft diameter at Coupling	mm	29	29	29	29	29	29	29	29	29	39	29	29	39	39	29	39	39	39	39	39	39	39	39	39	54	39	39	54	54
3. Bearing Centres	mm	458	458	458	458	458	458	458	458	458	520	458	458	520	520	458	520	520	520	520	520	520	520	520	520	580	520	520	580	580
4. Bearing of Basic Design No. at Drive End		6306	6306	6306	6306	6306	6306	6306	6306	6306	6308	6306	6306	6308	6308	6306	6308	6308	6308	6308	6308	6308	6308	6308	6308	6311	6308	6308	6311	6311
5. Bearing of Basic Design No. at Drive End		6306	6306	6306	6306	6306	6306	6306	6306	6306	6308	6306	6306	6308	6308	6306	6308	6308	6308	6308	6308	6308	6308	6308	6308	6311	6308	6308	6311	6311

D. STUFFING BOX

1. Inside Diameter	mm	73	73	73	73	73	73	73	73	73	85	73	73	85	85	73	85	85	85	85	85	85	85	85	85	105	85	85	105	105
2. Type of Seal	SINGLE BALANCED OR UNBALANCED MECHANICAL SEAL																													
3. Bearing Protection	BEARING ISOLATOR PROVIDED AS AN OPTION																													
4. Mechanical Seal Size	mm	35	35	35	35	35	35	35	35	35	45	35	35	45	45	35	45	45	45	45	45	45	45	45	45	60	45	45	60	60

E. SERVICE LIMITS

1. Maxm. Working Pressure	Bar	12	12	12	12	12	12	12	12	12	12	12	12	12	12	12	12	12	12	12	12	12	12	12	12	12	12	12	12	12
2. Maxm. Hydrotest Pressure	Bar	18	18	18	18	18	18	18	18	18	18	18	18	18	18	18	18	18	18	18	18	18	18	18	18	18	18	18	18	18
3. Maxm. Suction Pressure	Bar	10	10	10	10	10	10	10	10	10	10	10	10	10	10	10	10	10	10	10	10	10	10	10	10	10	10	10	10	10
4. Max. Temp. Mechanical Seal	ºC	95	95	95	95	95	95	95	95	95	95	95	95	95	95	95	95	95	95	95	95	95	95	95	95	95	95	95	95	95
5. Maxm. Speed	RPM	3000	3000	3000	3000	3000	1800	1800	1800	1800	1800	1800	1800	1800	1800	1800	1800	1800	1800	1800	1800	1800	1800	1800	1800	1800	1800	1800	1800	1800

OTHER PRODUCTS FROM PUMPSENSE

A comprehensive range of horizontal and vertical dry pit sewage pumps are available to cover a wide range of duties at four pole, six pole and eight pole speeds.

Our single stage range of NFPA20 fire pumps cover duties up to 5000usgpm and beyond. Pumps can be supplied with certification by independent inspection agencies.

Standard split case range covers both single and two stage pumps for capacities up to 3000 m^3/hr and heads up to 200m. Many customized options are available

Complete range of ISO 2858 End Suction pumps are optimized for highest possible efficiency. All pumps are available in high working pressure versions with strengthened bearing arrangement.

Large end suction pumps cover sizes up to 400mm. These pumps are available for air conditioning, industrial cooling water supply, and marine external fire services.

Two stage split case pumps are available for high pressure cleaning and high head industrial applications. Pumps are offered with both internal and external cross-overs for capacities up to 1200m^3/hr and heads up to 400m.

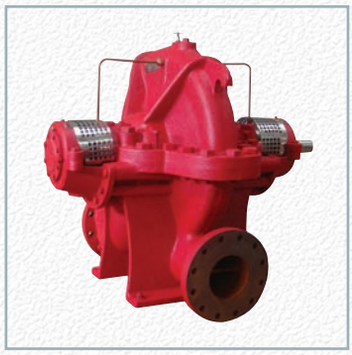

Single stage double volute split case pumps are offered both in horizontal and vertical shaft configuration. Customised designs are offered for special applications.

Two stage NFPA20 Split Case fire pumps incorporate two double entry impellers for high suction lift capability and complete axial thrust balance. The pumps are available for rated flows up to 1500 gpm and heads up to 300 m at 2950rpm.

Test Bed at Pumpsense is fully compliant with the requirements of ISO 9906. Test set up is completely automated for flow control and data acquisition.

PUMPSENSE FLUID ENGINEERING PVT. LTD

5/F, Hastings Court, Tower A , 96, Garden Reach Road, Kolkata – 700023, INDIA

Tel: +91-33- 24591861/1862 Fax: +91-33-24591862

Web: worldofpumps.com email: enquiries@worldofpumps.com